MOTOYAMA

General Specifications

Model PA92A
PNEUMATIC VALVE POSITIONERS

The Model PA92A pneumatic valve positioner is force-balanced instrument with semi-bleed type that is mounted on control valve with a single or double acting actuator

It is used to control the valve opening precisely. The positioner provides to improve sharply the positioning accuracy and response of process control valve.

1. FEATURES

1 Compact and Light Weight Designed

- Integrated construction with received part of input signal pressure and pilot relay.

2 Wide Functional Capability

- Available to control with either a single or double acting actuator, linear and rotary motion and small flow throttling valve.

3 Built-in Manual Selector

- Permits manual operation with supply by-passing, 0.14 ～ 0.7MPaG（1.4 ～ 7.0kgf/cm^{2}G）air range, by manual selector mechanism.

4 Low Consumption of Air

- Economical design with low air consumption.

5 High Reliability

- Designed simple and strong construction.
- Permits fast response and excellent reliability.

6 Easy to maintain

- Extremely easy to adjust, owing to the component unit of adjustment mechanism.
- Permits easy maintenance because of simple construction.

7 Corrosion Resistant

- Permits the protection against severe environments, because that component parts are made of stainless steel or noncorrosive materials.

2. SPECIFICATIONS

Type		Model PA92A			
		Single Acting Type		Double Acting Type	
		Linear Motion	Rotary Motion	Linear Motion	Rotary Motion
Input Signal Range		20～100kPaG（0.2～1.0kgf/cm²G） (available 1/2 split range)			
Supply Air Pressure		Max. 700kPaG (7 kgf/cm²G)			
Pressure Gage Range		0～0.2MPa（0～2kgf/cm²）, 0～0.4MPa（0～4kgf/cm²）, 0～1.0MPa（0～4kgf/cm²）			
Air Piping Connection		Rc 1/4（※ NPT 1/4）			
By-pass Mechanism		Built-in Manual Selector (supply by-pass)		—	
Structure		Water Proof			
Performance and Characteristics	Static Air Consumption	5ℓ/min(NOR.)(supply air press. 140kPaG(1.4kgf/cm²G), output 50%) 7.5ℓ/min(NOR.)(supply air press. 280kPaG(2.8kgf/cm²G), output 50%)		11ℓ/min (NOR.) (supply air press. 400kPaG (4kgf/cm²G), output 50%)	
	Output Capacity	50ℓ/min (NOR.) (supply air press. 140kPaG (1.4kgf/cm²G), released outlet)		140ℓ/min (NOR.) (supply air press. 400kPaG (4kgf/cm²G), released output)	
	Output Characteristics	Linear (3)			
	Standard Stroke	10～65mm (※< 10mm)	60°（※ 90°）	10～100mm (※ 110～130mm)	60°（※ 90°）
	Linearity	± 1.0% F.S.	± 2.0% F.S.	± 2.0% F.S.	± 2.0% F.S.
	Hysteresis Error	1.0% F.S.	1.5% F.S.	1.5% F.S.	2.0% F.S.
	Dead-band (substane alone)	0.2% F.S.		0.5% F.S.	
	Repeatability	0.3% F.S.		0.5% F.S.	
	Supply Pressure Effect	0.2% / 10kPaG（0.1kgf/cm²G）		0.3% / 10kPaG（0.1kgf/cm²G）	
	Position Error	4% / 90°			
	Ambient Temperature Limit	-20℃～+70℃（※-50℃～+60℃, 0℃～+100℃）			
Painting		Acrylic resin paint, Munsell 10 B 5/3 (Acrylic resin paint)			
Weight		about 1.1 kg		about 1.2 kg	
Equipped Component		Model MR2000 Air filter regulator（attached pressure gage） (2)			

(Notes) (1) ※ Manufactured and attached as option according to customer's order.
(2) Air filter regulator (attached pressure gage) is equipped as standard, and also serve for supply air gage.
(3) Can be converted the inherent flow characteristics for eccentric rotating plug valve (Model 2992, Gyroll) to equal percentage characteristics.
(4) Scale of pressure gauge is expressed in MPa (Option…Bar, Psi, kgf/cm²)
(5) For actuator size more than φ500, other type of p/p positioner is recommended.
(6) A special Feedback Spring will be applicable for 60° rotary motion type (single and double acting) with 1/2 split range.

3. MODEL NUMBERING SYSTEM

Specifications		Basic Model No.	Specification Code	
Type	Pneumatic Valve Positioner	PA92A		
Motion	Linear		L	
	Linear (stroke < 10mm)		S	
	Rotary (only concentric mounting)		R	
Actuator Type	Single Acting			S
	Double Acting			D
	Single Acting (reverse positioner)			G

4. CONSTRUCTION

1 Single Acting Type

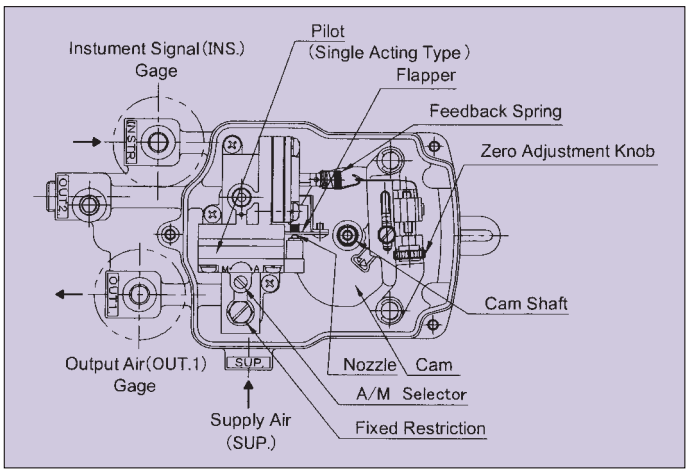

2 Double Acting Type

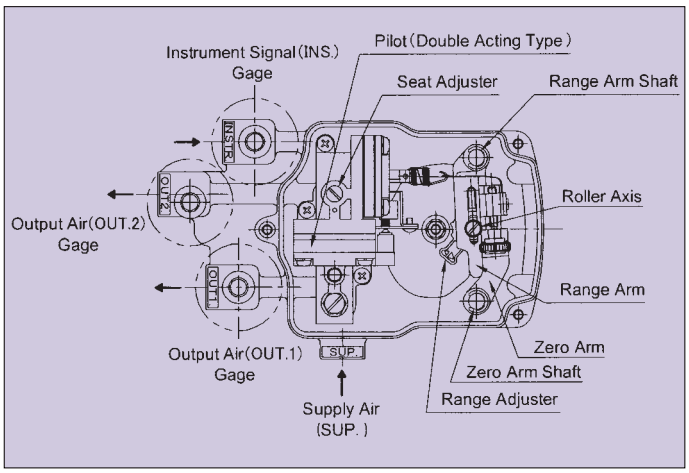

5. MAIN DIMENSIONS

Unit : mm

1 Single Acting Type (Standard Stroke 10～65mm)

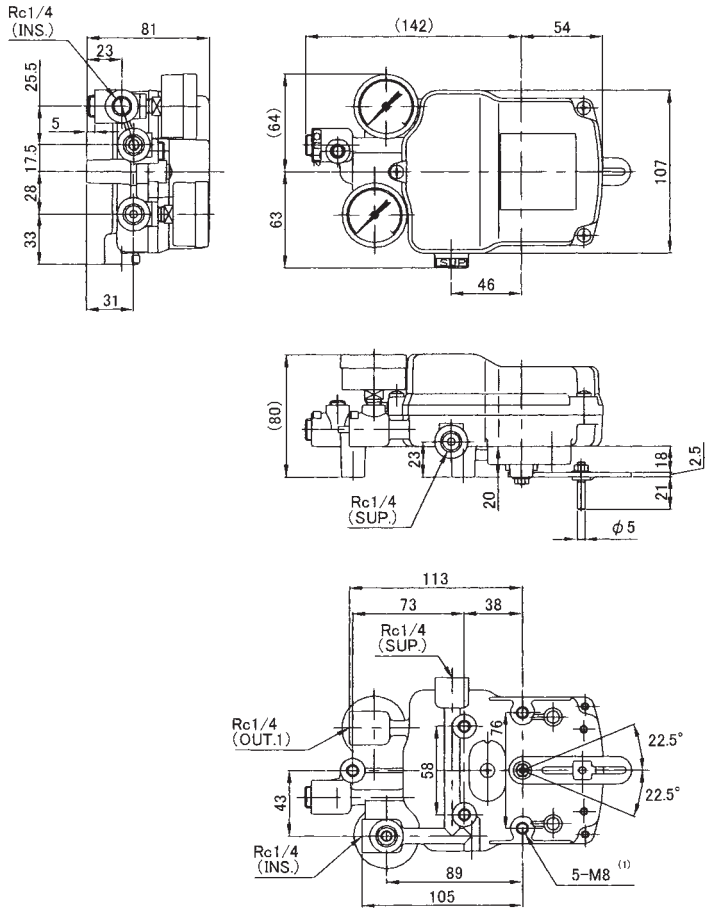

2 Double Acting Type (Standard Stroke 10～100mm)

The external dimensions are same as single acting type at left figure except OUT.2 connection ※ marked.

(Notes) (1) Use 2 holes among 5 holes as standard to mount bracket both for single and double acting type.
(2) The external dimensions for rotary motion (standard opening 60°) are identical to the above except for feedback lever.

Bulletin No.MCE-B6106B

TRADE Emperor MARK 株式会社本山製作所

MOTOYAMA ENG. WORKS, LTD.

http://www.motoyama-cp.co.jp

本 社 工 場　〒981-3697 宮城県黒川郡大衡村大衡字亀岡5－2　TEL(022)344-4511(代表) / FAX(022)344-4522
E-mail : info@motoyama-cp.co.jp

Main Office & Factory　5-2, Ohira Aza Kameoka, Ohira-mura, Kurokawa-gun, Miyagi, 981-3697, Japan
TEL +81-22-344-4511 / FAX +81-22-344-4522
E-mail : info-overseas@motoyama-cp.co.jp

●販売・サービスネットワーク

東京支店	〒210-0007	神奈川県川崎市川崎区駅前本町 10-5 クリエ川崎 11F	TEL(044)381-8770(代表)	FAX(044)381-8772
大阪支店	〒550-0014	大阪市西区北堀江一丁目 12-19 クリモトビル 3F	TEL(06)6535-8111(代表)	FAX(06)6535-8655
国際営業部	〒210-0007	神奈川県川崎市川崎区駅前本町 10-5 クリエ川崎 11F	TEL(044)381-8771	FAX(044)381-8773
札幌営業所	〒001-0912	札幌市北区新琴似12条七丁目1-47 リバティタウンP棟101号	TEL(011)766-1520	FAX(011)766-1521
東北営業所 大衡サービスセンター	〒981-3697	宮城県黒川郡大衡村大衡字亀岡 5-2	TEL(022)344-1761	FAX(022)344-1762
上越営業所 上越サービスセンター	〒942-0036	新潟県上越市大字東中島2393番地	TEL(025)542-5151	FAX(025)542-5152
関東営業所 千葉サービスセンター	〒290-0046	千葉県市原市岩崎西一丁目5-19	TEL(0436)21-4400	FAX(0436)21-3540
静岡営業所	〒422-8033	静岡市駿河区登呂二丁目10-13 ハイツ富士1F	TEL(054)288-2237	FAX(054)288-2239
名古屋営業所 中部サービスセンター	〒481-0012	愛知県北名古屋市久地野安田36番地	TEL(0568)26-6681	FAX(0568)26-6631
阪神サービスセンター	〒560-0894	大阪府豊中市勝部二丁目18-3	TEL(06)6854-7511	FAX(06)6854-7512
徳山営業所 周南サービスセンター	〒745-0861	山口県周南市新地一丁目6-11	TEL(0834)21-5012	FAX(0834)31-0450
四国営業所 新居浜サービスセンター	〒792-0851	愛媛県新居浜市観音原町1013-1	TEL(0897)40-0270	FAX(0897)40-0305
大分営業所 大分サービスセンター	〒870-0108	大分市大字三佐字山ノ神980-1	TEL(097)527-3704	FAX(097)522-2352

●海外関連会社

本山阀门(大連)有限公司　〒116601　中国　遼寧省大連市金州新区港興大街 39-14-7　TEL +86-411-6589-1277　FAX +86-411-6589-1278

●海外販売代理店

中国、韓国、台湾、シンガポール、インドネシア、マレーシア、サウジアラビア

●SALES AND SERVICE NETWORK

Overseas Marketing & Sales Dept. : 11th Floor, Clie Kawasaki, 10-5, Ekimae-honcho, Kawasaki-ku, Kawasaki-city, Kanagawa, 210-0007 Japan
TEL: +81-44-381-8771　FAX : +81-44-381-8773

Domestic Sales Branches : Tokyo, Osaka, Sapporo, Tohoku, Joetsu, Kanto, Shizuoka, Nagoya, Hanshin, Tokuyama, Shikoku, Oita

●OVERSEAS AFFILIATED COMPANY

MOTOYAMA VALVE (DALIAN) CO., LTD
Gangxing Street 39-14-7, Jinzhou New District, Dalian-city, 116601 China　TEL: +86-411-6589-1277　FAX: +86-411-6589-1278

●OVERSEAS NETWORK

China, Korea, Taiwan, Singapore, Indonesia, Malaysia, Saudi Arabia

■本カタログの記載内容は、商品の改良等のため予告なく変更することがありますので予めご了承下さい。
■MOTOYAMA is continuously improving and upgrading its product design, specifications and/or dimensions. Information included herein is subject to change without notice.
■本カタログは正しい情報の提供を目的としたものであり、本製品の市場性または適合性の保証を証明するものではありません。
■This catalog is supplied for information purpose only and should not be considered certified marketability and conformability of this product.

201904 MSP