MOTOYAMA

General Specifications

Model 02-G & Model 02-C

LOW AND MEDIUM PRESSURE

ANGLE TYPE CONTROL VALVES

Angle-type control valves are indispensable to control fluid of high differential pressure, slurry, high viscosity or adhesive. They are provided with a number of features such as low resistance of passage, antiwear quality within the valve, and easy maintenance and inspection.

Model 02 series valves are provided as the general-purpose angle valves to be used under various service conditions such as high temperature, high pressure, high differential pressure, extremely low temperature and low noise, and used for various industries and service such as power, chemical and water process plants. You can select optimum valves from a variety of models in this series.

1. SELECTION OF VALVE TYPE

The flowchart of angle type control valves

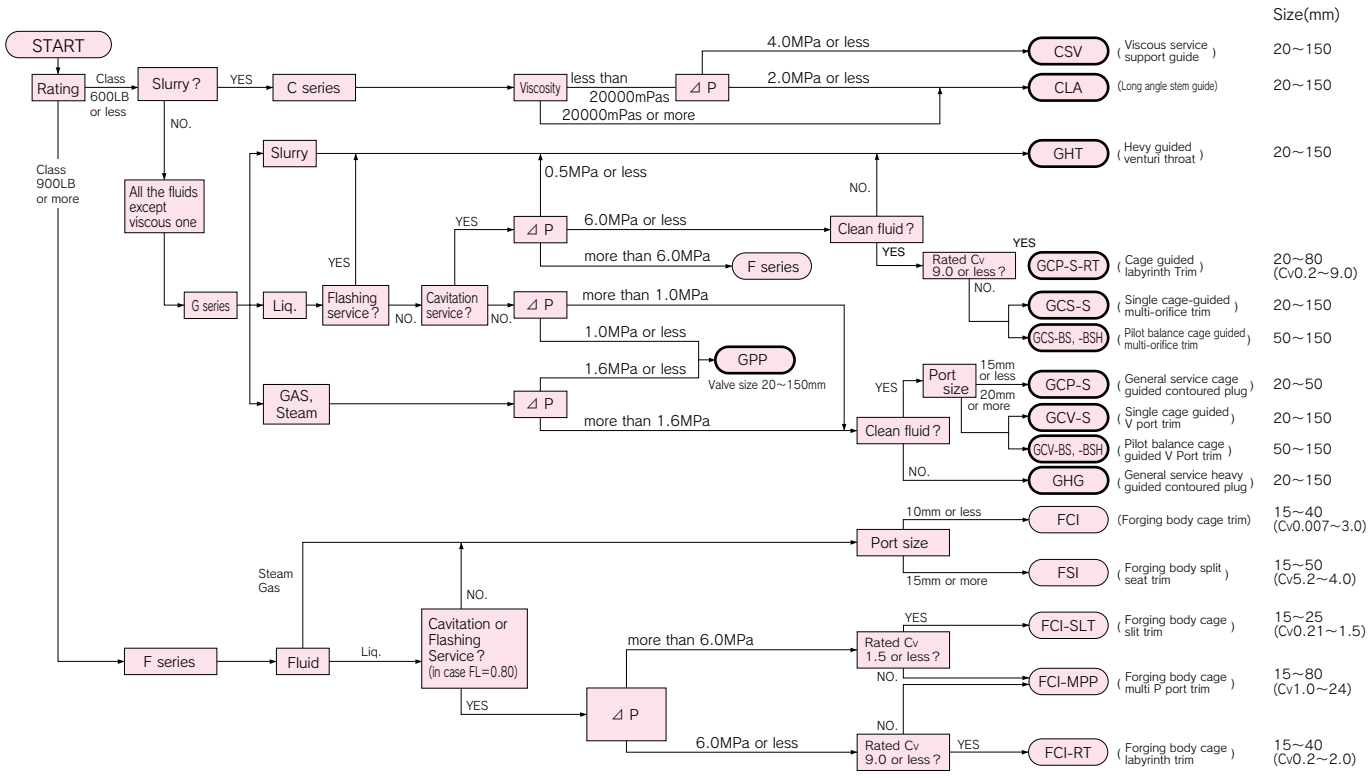

【**Notes**】 1. For the specifications exceeding this range, be sure to contact with our sales office.
2. When you need steam jackets, select one of C-series valves.
3. For low noise valve on gas service, select GCS-S, GCS-BS or GCB-BSH type.
4. As for the details of F-series valves, refer to the other catalog（Bulletin No.MCE-B1202）.

2. FEATURES

G Series

GPP Type (Conventional)

This is the general-purpose angle valve to be used for all the low-pres-sure fluids such as liquid, gases, steam and slurry.

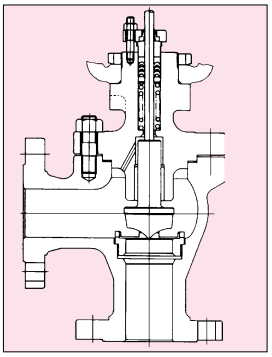

GHG Type

(For medium and high pressure)

This type employs the heavy guide to bear the fluid of high differential pressure and is well suited to the gas or steam of high differential pressure.

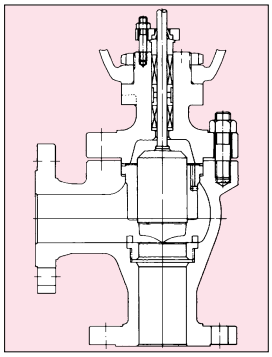

GHT Type

(For flashing fluids of high differential pressure)

In additionto the heavy guide, this type is provided with a sleeve on the internal wall of the outlet.
It is well suited to the fluids of high pressure or high differential pressure accompanied with flashing or cavi-tation.
This type is provided with the reduced port as a standard feature.

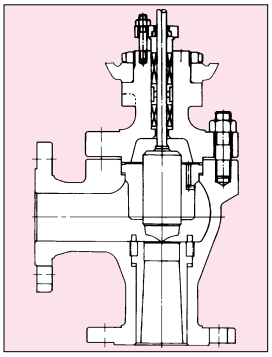

GCP-S GCV-S Type GCS-S

(For clean fluid and high differential pressure)

This is cage guided type for high differential pressure.
It employs the cage trim enable for wide selection such as, v port trim or low noise application.
GCP type applies for port size 15mm or less and GCV type for 20mm and over with both type single seat.
Further, GCS type of multi-holes cage type can be available. Also, GCP-S-RT type of labyrinth trim can be available.
GCQ-S type for On-Off application.

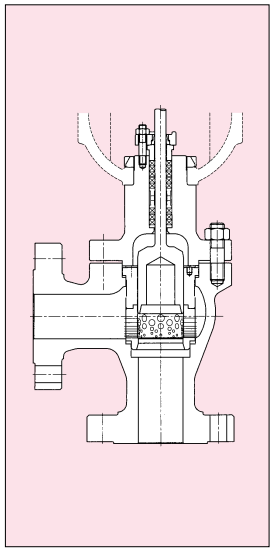

GCV-BS, -BSH GCS-BS, -BSH Type

(For clean fluid and high differential pressure)

This is Seal Ring Balanced cage guided type. Utilizing the Seal Ring balance type, very limited seat leakage can be realized link single seat valves with installing small actuator like double seat valves.
-BS type applies for normal temperature and -BSH type for high temperature.
Body size available from 50mm or more.
GCS-BS or GCS-BSH type, which have multi-holes in outer cage, also available.

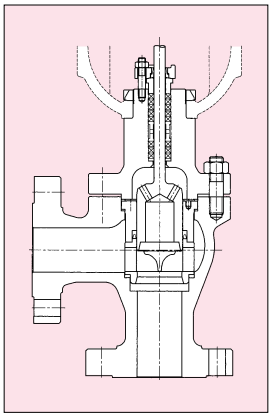

C Series

CSV Type

(For high viscous fluid and slurry)

This is of split body type with pocketless structure and also provid-ed with the support guide.
Therefore, the fluid does not stay on the upper part of the guide so that it is not adhered. Thie type is well suited to high viscous fluids and slurry. It can be mounted with various jackets.
The ceramic and tungsten carbide plug and seat-ring are also available for this valve.

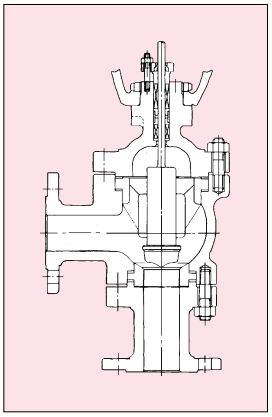

CLA Type

(For high viscous fluid and high concentration of slurry)

This type has the bent pipe with a large bending radius as the fluid passage on the inlet side and the seat-ring mounted on the same spherical surface as the inside wall of the valve body to eliminate the pocket part inside of the body.
Therefore, it has very little fluid resistance to be well suited to the service of high viscous fluids.
It is avairable with butting surface of body inside or with jacket body.
Purge construction can be provided according to customer's request.

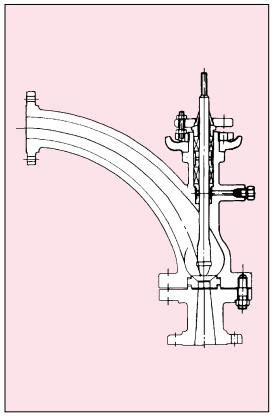

3. SPECIFICATIONS

Valve Type		**Diaphragm operated control valve**							
Valve Model No.		**3802, 2802**							
VALVE BODY	**Body Type**	02-GPP	02-GHG	02-GHT (1)	02-GCP-S 02-GCP-S-RT	02-GCV-S 02-GCS-S	02-GCV-BS, -BSH 02-GCS-BS, -BSH	02-CSV	02-CLA
	Valve Size (mm)	20 ～ 150					50 ～ 150	20 ～ 150	
	Valve Size (in.)	3/4 ～ 6					2 ～ 6	3/4 ～ 6	
	Pressure Rating	JIS 10K ～ 40K, ASME/JPI Class 150 ～ 600							
	End Connections	Flanged end : FF, RF, RJ, Male and female, Tongue and groove (Welding end : SW, BW※)							
	Body Materials	See page 5 "Materials"							
	Body Style (2)	Split bonnet						Split bonnet, bottom flange	Split bottom flange
	Bonnet Types	Plain : − 17 ℃ ～ + 230 ℃, Fin : − 20 ℃ ～ − 17 ℃, More than 230 ℃ Extension : (Light) − 100 ℃ ～ − 20 ℃, (Heavy) − 196 ℃ ～ − 100 ℃ See page 6 (Bellow type)						Plain Fin	
	Gland Type	Bolted gland							
	Packing(Non Asbestos)	Braded packing, Mold packing							
	Gaskets(Non Asbestos)	Flat, Serrated, Spiral wound See page 6 (Gaskets)							
	Guiding	Top guid (Standard)	Top guide (Heavy)	Top guide (Heavy)	Cage guide			Top guide (Heavy)	Stem guide
	Seat Ring Types	Screwed		Screwed with liner	Cage			Splitted (built-in)	
	Valve Plug Action	Push-down close							
	Seat Type	Single seated							
	Plug Characteristics	Equal percentage, Linear, Quick opening (GCS-S, -BS, -BSH ; Linear, or Modified parabolic)							
	Trim Materials	SUS316, SUS440B							
	Treatment of Trim	See page 5 "Main Materials"							
	Flow Direction (3)(4)	↰	↴	↰	↴	↴	↴	↴	
ACTUATOR	**Actuator Type**	Model 3800 Multi-spring type single acting diaphragm Actuator					Model 2800 Spring type single acting diaphragm Actuator		
	Actuator Sizes	N24	N28	N33S	N40		500S	650S	
	Max. Stroke (mm)	25	38	38	65		65	65	
	Supply Air Press. kPaG (kgf/cm²G)	140 (1.4), 240 (2.4), 280 (2.8), 300 (3.0), 400 (4.0) (8)					120 (1.2), 240 (2.4), 280 (2.8)		
	Spring Range kPaG (kgf/cm²G)	20 ～ 100 (0.2 ～ 1.0), 40 ～ 200 (0.4 ～ 2.0), 80 ～ 200 (0.8 ～ 2.0), 100 ～ 280 (1.2 ～ 2.8) (8)					20 ～ 100 (0.2 ～ 1.0), 20 ～ 180 (0.2 ～ 1.8), 40 ～ 200 (0.4 ～ 2.0), 60 ～ 220 (0.6 ～ 2.2), 80 ～ 200 (0.8 ～ 2.0), 100 ～ 220 (1.0 ～ 2.2)		
	Action	Direct action, Reverse action							
	Materials	(Diaphragm) Cloth reinforced chloroprene rubber, (Yoke) FC 200							
	Air Connection	Rc 1/4, Rc 3/8 (650, 650X only)							
	Ambient Temperature	− 20 ℃ ～ + 70 ℃ (− 50 ℃ ～ − 20 ℃, + 70 ℃ ～ + 100 ℃※)					− 30 ℃ ～ + 70 ℃ (−50 ℃～−30 ℃, +70 ℃～+100 ℃※)		
Painting Color		Silver, No painting on stainless steel							

Body Type			02-GPP	02-GHG	02-GHT(1)	02-GCP-S 02-GCP-S-RT	02-GCV-S 02-GCS-S	02-GCV-BS, -BSH 02-GCS-BS, -BSH	02-CSV	02-CLA
VALVE CHARACTERISTICS AND PERFORMACE	**Control Mode**		Throttling control, On-off control							
	Valve Action		Direct action (Air-to close). Reverse action (Air-to open)							
	Applicable Range	**Press.**	9.80MPaG (100kgf/cm²G) or less (Pressure limit shall conform to the standard of material & pressure temperature rating)							
		Temp.	−196℃～+550℃ (Temperature limit shall conform to the standard of material & pressure temperature rating)							
	Allowable Differential Press.		See page 10 "Allowable Shut-off Pressure"							
	Rated Cv Value		See page 8 "Rated Cv Value"							
	Flow Characteristics		See page 8 "Flow Characteristics"							
	Inherent Rangeability		See page 8 "Rated Cv Value"							
	Allowable seat leakage rate		Single Seated							
		Control	0.01 % of rated Cv value (ANSI/FCI Class Ⅳ) Tight shut off (T.S.O.)※ Valve Size ≦ 25mm ··· 0.0001 % ≦ 100mm ··· 0.001 % ≦ 150mm ··· 0.002 %							
		Quick Opening	Valve Size (of rated Cv value) ≦ 25mm ··· 0.0001 % ≦ 100mm ··· 0.001 % ≦ 150mm ··· 0.002 %							
	Action Accuracy	**Hysteresis Error (with Positioner)**	Max. 2 % F.S.							
		Linearity (with Positioner)	Max. ±2 % F.S.							
ADDITIONAL OPTIONS	**Valve Body**		Special treatment for trim, Jacket body							
	Actuator		Handwheel (Top-mounted handwheel, Side-mounted handwheel), Travel stop, Diaphragm material : Ethylene propylene rubber, Yoke material : SCPH2							
	Accessories		Pneumatic positioner (PA92A), Electro-Pneumatic positioner (EA91A, EA90A, EA10S), Air filter regulator (MR2000), Limit switch, Solenoide valve, Booster relay, Speed controller, Lock up valve, Pneumatic operated valve.							
	Others		The High Pressure Gas Safety Low Certification, Oil free, Water free, Sandproof, Dustproof, Anti-salt damage, Vacuum service, Cold district spec, Tropical district spec, External exposure bolt & nut S.S., Optional painting color.							

02 G,C

【Notes】(1) GHT is provided with the reduce port as a standad feature.

(2) Body Style.

ⓐ Spilit bonnet type ⓑ Split bonnet and bottom flange type ⓒ Split bottom flange type

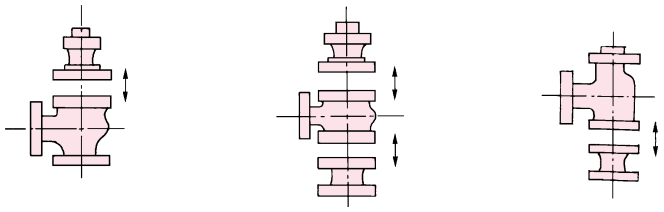

(3) Flow direction.

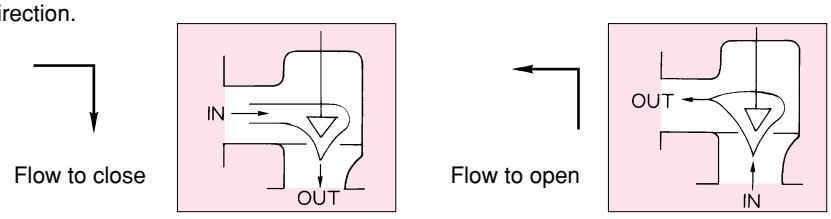

(4) Flow direction is represented as a standard. Change of the flow direction is available.

(5) Valve performance is represented under the condition of standard packing (P4519 + V7010).

(6) ※ Manufactured and attached as option according to customer's request.

(7) In GCS type, if the fluid is gas or steam and seat type is single, the flow direction must be flow-to-open (⌝)

(8) Spring Range 120-280kPaG with supply pressure of 400kPaG is available only for N33S and N40 of actuator size.

4. MAIN MATERIALS

1 Typical Combination of Materials

Parts Name	Materials			
Body, Bonnet	WCB	WC1, WC6, WC9, C5	CF8	CF8M
Trim	SUS 316 SUS 440B		SUS 316	
Stud Bolt & Nut	A193 GrB7/S45C (H)		A193 GrB8 CL2/SUS304	

【Notes】(1) This table shows typical combination of materials. The combination may be subject to change by pressure, temperature and kind of fluid.
(2) Trim materials may be casting instead of bar materials in some cases.
(3) For trim of CSV, super-hard or special materials are avaiable.Please contact our sales office.

2 Applicable Pressure and Temperature of CoCr Alloy Hard Facing for Trim

■ GPP, GHT, GHG and C series

Valve type \ Classification	A	B	C	D	E
GPP, GHT, GHG C series	Not Required	CoCr Alloy Seat	CoCr Alloy Face	CoCr Alloy Face + GGS	CoCr Alloy Seat + GGS

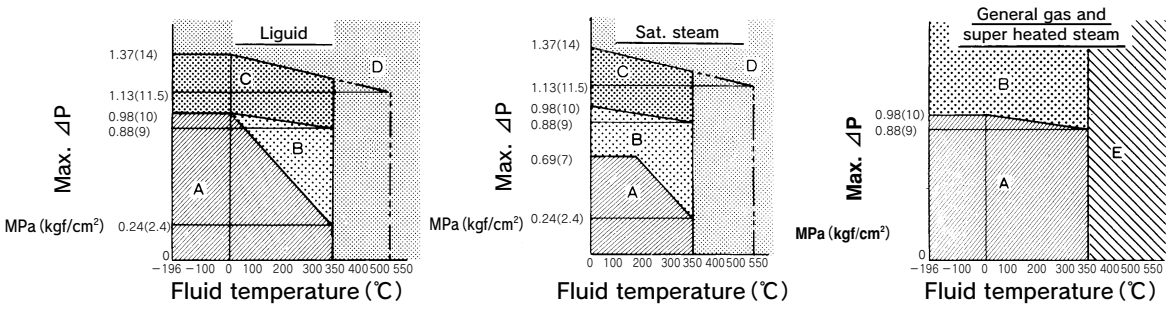

(1) Seat-ring of on-off control valve and of throttling control valve for tight shut off (T.S.O.) is hard faced at the area of CoCr Alloy Seat and over.
(2) In case of flashing or cavitation or saturated steam service, if temp. range is − 20 ℃ ~ 400 ℃, SUS440B is most suitable.
(3) Whichever fluid is applied, at 350 ℃ and over, guide bushing and guide post is hard faced by CoCr Alloy treatment.
(4) In case of saturated steam, if inlet pressure is 0.69MPaG (7kgf/cm²G) and over, seat-ring is hard faced at the area of CoCr Alloy Seat and over.
(5) For single seated type, if shut-off pressure is ≦ 1.37MPaG (14kgf/cm²G), seat-ring is hard faced at the area of CoCr Alloy Seat and over.
(6) If pressure rating is ≧ JIS 40K or ≧ ASME 600, seat-ring is hard faced at the area of CoCr Alloy Seat and over.

■ GCP-S, GCV-S, GCS-S, GCV-BS, GCV-S-BSH, GCS-BS, GCS-BSH

SUS316 (SCS14A), SUS316L (SCS16A)

CoCr Alloy Hard Facing	CoCr Alloy Seat	CoCr Alloy Face	CoCr Alloy Seat	CoCr Alloy Face	
Cage Type	GCV-S, GCQ-S, GVS-S		※ GCV-BS, GCS-BS, GCQ-BS	※ GCV-BS, GCS-BS, GCQ-BS GCV-BSH, GCS-BSH, GCQ-BSH	GCP-S GCP-S-RT
Valve Plug	CoCr Alloy Seat	CoCr Alloy Face	CoCr Alloy Seat	CoCr Alloy Face	
Guide	No Hard Facing : Design Temp. ≦ 400 ℃ CoCr Alloy Face : Design Temp. > 400 ℃		No Hard Facing	No Hard Facing : Design Temp. ≦ 400 ℃ CoCr Alloy Face : Design Temp. > 400 ℃	
Cage	CoCr Alloy Seat				CoCr Alloy Face
Applicable Temperature	Refer to CoCr Alloy Hard Facing Press./Temp. Range		− 50 ℃ ~ + 230 ℃	+ 500 ℃ or Lower	Refer to CoCr Alloy Hard Facing Press./Temp. Range
Allowable ⊿P.			Refer to CoCr Alloy Hard Facing Press./Temp. Range		
Applicable Pressure	9.8MPaG (100kgf/cm²G) or Lower				

SUS440B

Cage Type	GCV-S, GCQ-S, GVS-S	※ GCV-BS, GCS-BS, GCQ-BS	※ GCV-BS, GCS-BS, GCQ-BS GCV-BSH, GCS-BSH, GCQ-BSH	GCP-S GCP-S-RT
Valve Plug	SUS440B (Heat treatment)			
Guide	SUS316 (SCS14A) No Hard Facing			
Cage	SUS440B (Heat treatment)			
Applicable Temperature	− 20 ℃ ~ + 400 ℃	− 20 ℃ ~ + 230 ℃	+ 400 ℃ or Lower	− 20 ℃ ~ + 400 ℃
Applicable Pressure	9.8MPaG (100kgf/cm²G) or Lower			

【Note】SUS440B shall be suitable for flashing or cavitation services within the temp. range of − 20 ℃ to + 400 ℃. It is not applicable for type CS-L.
※-BS or -BSH type has applicable pressure and temperature range. Refer to the table corresponds with the range.

3 Applicable Pressure and Temperature of Bellows Seal Bonnet

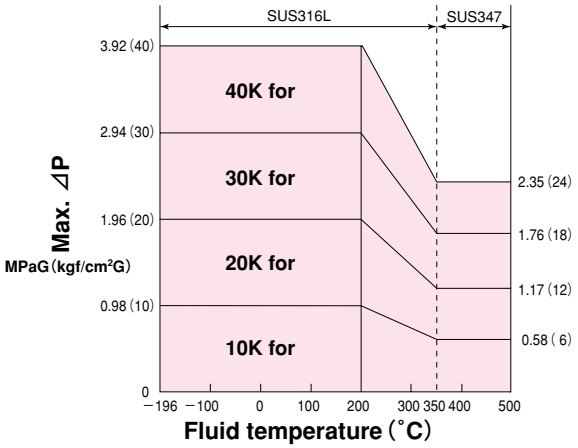

【Note】（15K）is applied to JIS10K and ASME/JPI 150 rating only.

4 Applicable Pressure and Temperature of -BS or -BSH

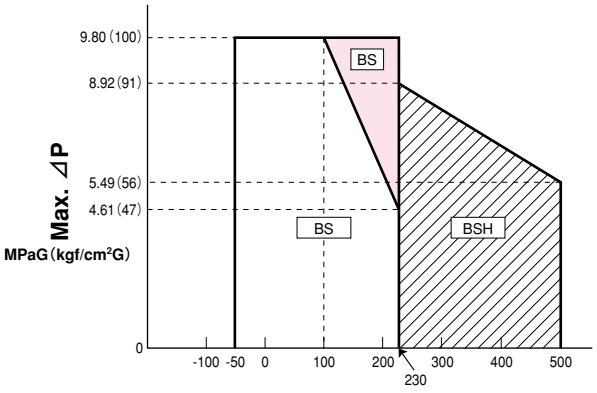

【Note】 BS Shaded area needs special Seal-Rings.

5 Gasket

Series	Type	Category	Gasket No.	Gasket type
G	GPP	A	No.1	PTFE flat gasket
				Non asbestos flat gasket
				Serrated metal gasket
	GHT GHG	B	No.2	Serrated metal gasket
	GCP-S GCP-S-RT GCV-S GCS-S GCV-BS, -BSH GCS-BS, -BSH	C	No.2	Serrated metal gasket
			No.3	Spiral wound gasket
C	CSV	B and D	No.2	Serrated metal gasket
			No.4	
	CLA	D	No.4	

【Note】 The gasket material is subject to fluid. temperature and pressure.

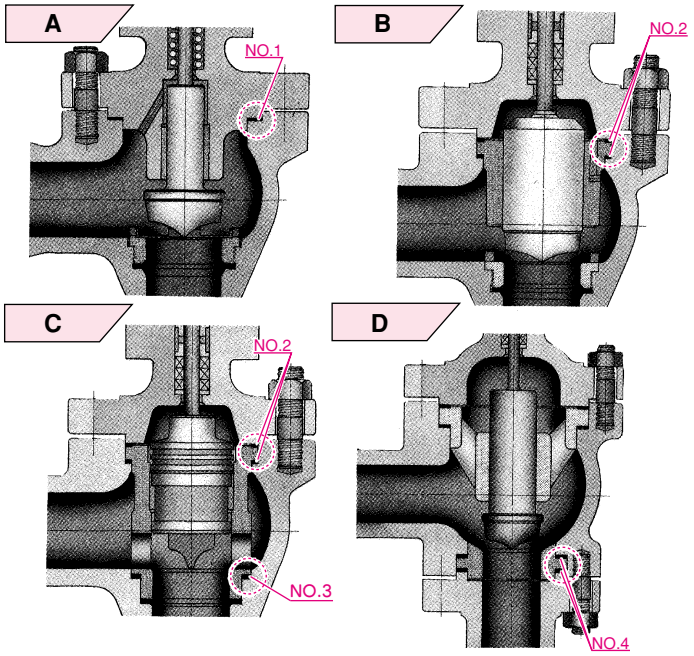

5. SCOPE OF PRODUCTION

Marks "○" and "◇" indicate the full port and the reduce port, respectively.

■ GPP, GCP-S Type

The port size range for GCP-S is ϕ 3 to 15 mm.

Valve Size	Port size (mm) / Travel (mm)	Small flow type ~ϕ3	ϕ4	6	7	8	10	15	20	25	32	40	50	65	80	100	125	150
		15	15	15	15	15	15	15	15	15	20	20	25	25	38	38	50	50
20(mm)	3/4(in.)	◇	◇	◇	◇	◇	◇	◇	○									
25	1	◇	◇	◇	◇	◇	◇	◇	◇	○								
40	1 1/2								◇	◇	◇	○						
50	2									◇	◇	◇	○					
65	2 1/2										◇	◇	◇	○				
80	3											◇	◇	◇	○			
100	4												◇	◇	◇	○		
125	5													◇	◇	◇	○	
150	6														◇	◇	◇	○

■ GHT, GHG Type

○ is not applied to GHT.

Valve Size	Port size (mm) / Travel (mm)	6 / 15	7 / 15	8 / 15	10 / 15	15 / 15	20 / 15	25 / 15	32 / 20	40 / 20	50 / 25	65 / 25	80 / 38	100 / 38	125 / 50	150 / 50
20(mm)	3/4 (in.)	◇	◇	◇	◇	◇	○									
25	1	◇	◇	◇	◇	◇	◇	○								
40	1 1/2					◇	◇	◇	◇	○						
50	2						◇	◇	◇	◇	○					
65	2 1/2							◇	◇	◇	◇	○				
80	3								◇	◇	◇	◇	○			
100	4									◇	◇	◇	◇	○		
125	5										◇	◇	◇	◇	○	
150	6											◇	◇	◇	◇	○

■ GCV-S, GCS-S, GCS-BS, GCS-BSH Type

Marks "●" and "◆" indicate for GCV-BS, GCV-BSH and GCS-BS, GCS-BSH.

Valve Size	Port size (mm) / Travel (mm)	20 / 15	25 / 15	32 / 20	40 / 20	50 / 25	65 / 25	80 / 38	100 / 38	125 / 50	150 / 50
20(mm)	3/4 (in.)	○									
25	1	◇	◇								
40	1 1/2	◇	◇	◇	○						
50	2		◇	◇ ◆	◇ ◆	○ ●					
65	2 1/2			◇ ◆	◇ ◆	◇ ◆	○ ●				
80	3				◇ ◆	◇ ◆	◇ ◆	○ ●			
100	4					◇ ◆	◇ ◆	◇ ◆	○ ●		
125	5						◇ ◆	◇ ◆	◇ ◆	○ ●	
150	6							◇ ◆	◇ ◆	◇ ◆	○ ●

■ GCP-S-RT

Valve Size	Port size CV = / Travel (mm)	0.2 / 15	0.4 / 15	0.6 / 15	1.0 / 15	1.5 / 15	2.0 / 15	3.0 / 15	5.2 / 20	9.0 / 25	12.0 / 25
15(mm)	1/2 (in.)	◆	◆	◆	◆	◆	◆				
20	3/4	◆	◆	◆	◆	◆	◆				
25	1	◆	◆	◆	◆	◆	◆				
40	1 1/2				◆	◆	◆	◆	◆		
50	2				◆	◆	◆	◆	◆	◆	
65	2 1/2				◆	◆	◆	◆	◆	◆	◆
80	3				◆	◆	◆	◆	◆	◆	◆

■ CSV, CLA Type

The port size of CLA is to 100 mm

Valve Size	Port size (mm) / Travel (mm)	ϕ3 / 15	ϕ4 / 15	6 / 15	7 / 15	8 / 15	10 / 15	15 / 15	20 / 15	25 / 15	32 / 20	40 / 20	50 / 25	65 / 25	80 / 38	100 / 38	125 / 50	150 / 50
20(mm)	3/4 (in.)	◇	◇	◇	◇	◇	◇	◇	○									
25	1	◇	◇	◇	◇	◇	◇	◇	◇	○								
40	1 1/2								◇	◇	◇	○						
50	2									◇	◇	◇	○					
65	2 1/2										◇	◇	◇	○				
80	3											◇	○	◇	○			
100	4												◇	◇	◇	○		
125	5													◇	◇	◇	○	
150	6														◇	◇	◇	○

6. FLOW CHARACTERISTICS

1 Rated Cv Value

Valve type	Port Size	(mm)	ϕ3	ϕ4	6	7	8	10	15	20	25	32	40	50	65	80	100	125	150
		(inch)	–	–	1/8	3/16	1/4	3/8	1/2	3/4	1	1 1/4	1 1/2	2	2 1/2	3	4	5	6
GPP GHT GHG C Series	Rated Cv		0.09	0.15	0.4	0.8	1.5 (2.1)	3.0 (4.6)	5.2 (6.5)	9 (10)	14 (15.6)	21 (23)	32 (35)	52 (62)	78 (93)	116 (130)	195 (227)	290 (350)	395 (520)
	Rangeability		10 : 1		15 : 1		25 : 1	30 : 1											
GCP-S GCV-S GCS-S GCV-BS, -BSH GCS-BS, -BSH	Rated Cv		0.09	0.15	0.4	0.8	1.5	3.0	5.2	7.5	14	18	27	46	71	110	180	275	395
	Rangeability		10 : 1	30 : 1	50 : 1														
GCP-S-RT	Rated Cv		0.2	0.4	0.6	1.0	1.5	2.0	3.0	5.2	9.0	12.0							
	Rangeability		30 : 1																

【Notes】 (1) The value within parentheses "( )" indicates the rated Cv value of quick opening.
(2) Rated Cv value is identical either to V-port snd quick opening for GCV-S and GCV-BS, -BSH.
(3) Port size of Model 02-GCP-S-RT is expressed in rated CV.

2 Flow Characteristics

■ GPP, GHT, GHG, C Series〔Eq.%〕

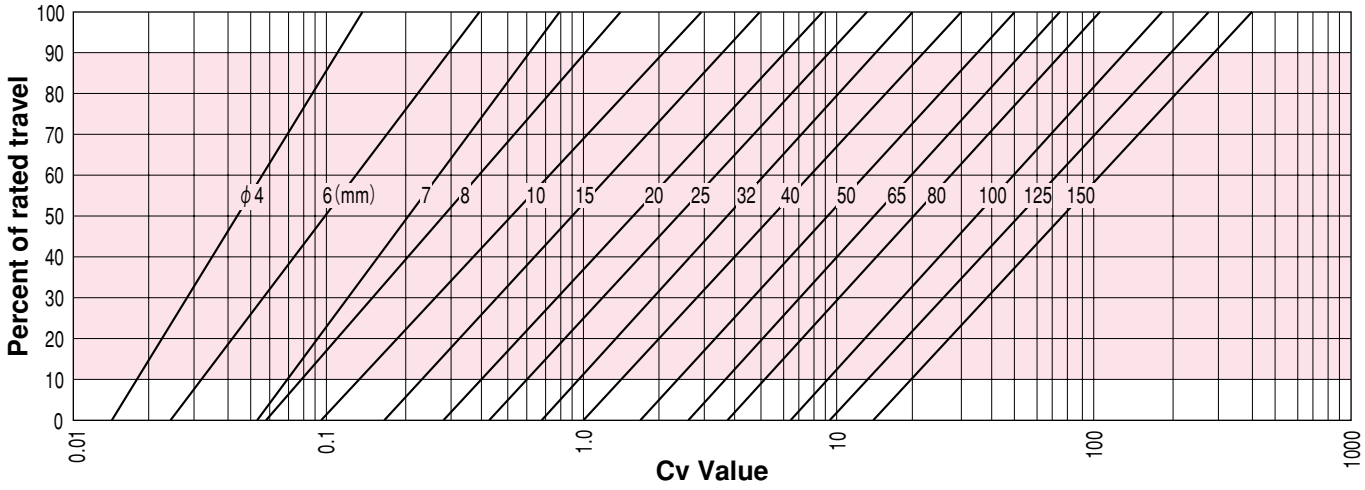

■ GPP, GCP-S, Small Flow Type 〔Linear〕

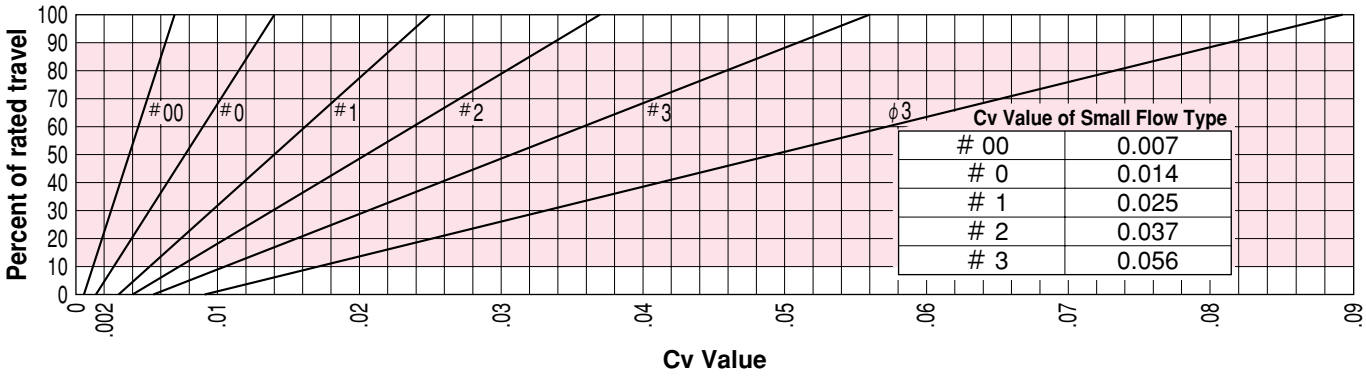

Cv Value of Small Flow Type

# 00	0.007
# 0	0.014
# 1	0.025
# 2	0.037
# 3	0.056

■ GCV-S, GCV-BS, GCV-BSH Type〔Eq.%〕

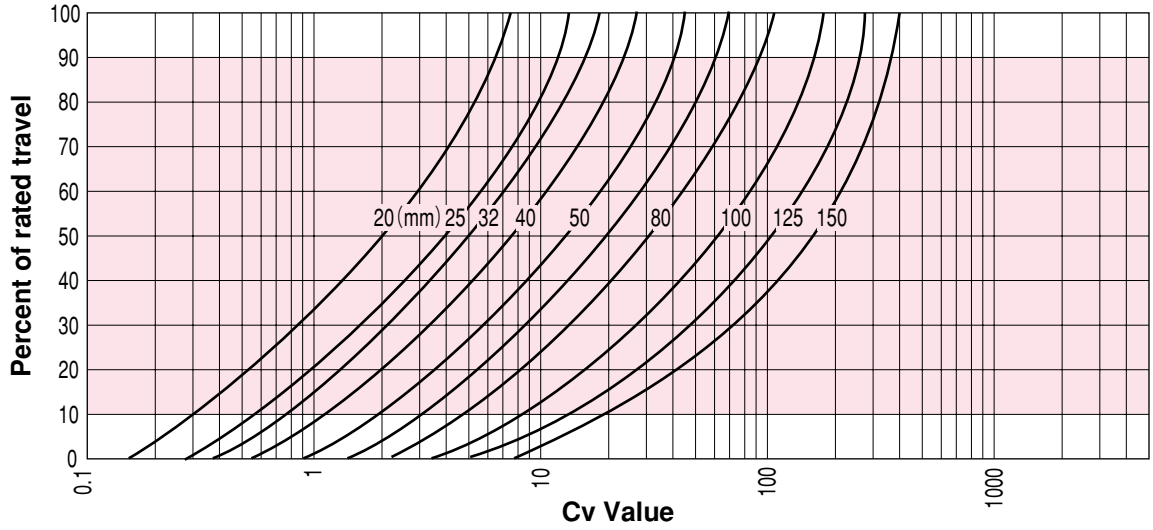

■ GCP-S〔Eq.%〕

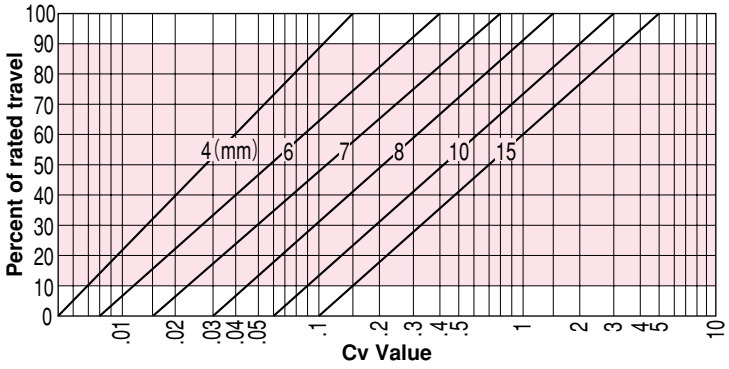

■ Modified Parabolic

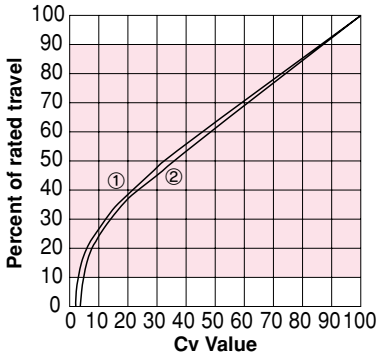

【Notes】 Curve① shows for GCS-S and GCS-BS, -BSH.
Curve② shows for GCP-S-RT.

7. ALLOWABLE DIFFERENTIAL PRESSURE

1 Off-balance Classification

Unit : kPaG (kgf/cm²G)

Action			Spring Range / Actuator Size N24～N40	Spring Range / Actuator Size 500, 650	Supply Air Pressure	Off-balance	Positioner
Contoured Plug	Direct Action	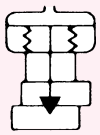	–	20～100 (0.2～1.0)	120 (1.2)	20 (0.2)	Without
			20～100 (0.2～1.0)		140 (1.4)	40 (0.4)	With
			40～200 (0.4～2.0)		240 (2.4)		
			–	60～220 (0.6～2.2)	280 (2.8)	60 (0.6)	
			40～200 (0.4～2.0)	40～200 (0.4～2.0)		80 (0.8)	
				–	300 (3.0)	100 (1.0)	
			–	20～180 (0.2～1.8)	280 (2.8)		
			※120～280 (1.2～2.8)	–	400 (4.0)	120 (1.2)	
	Reverse Action	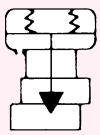	–	20～100 (0.2～1.0)	120 (1.2)	20 (2.0)	Without
			20～100 (0.2～1.0)		140 (1.4)		With
			40～200 (0.4～2.0)		240 (2.4)	40 (0.4)	
			–	60～220 (0.6～2.2)	280 (2.8)	60 (0.6)	
			80～200 (0.8～2.0)	80～240 (0.8～2.4)		80 (0.8)	
			–	100～220 (1.0～2.2)		100 (1.0)	
			※120～280 (1.2～2.8)	–	400 (4.0)	120 (1.2)	
Quick Opening	Direct Action	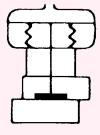	40～200 (0.4～2.0)		240 (2.4)	40 (0.4)	Without
			–	60～220 (0.6～2.2)	280 (2.8)	60 (0.6)	
			40～200 (0.4～2.0)	40～200 (0.4～2.0)		80 (0.8)	
				–	300 (3.0)	100 (1.0)	
			–	20～180 (0.2～1.8)	280 (2.8)		
			※120～280 (1.2～2.8)	–	400 (4.0)	120 (1.2)	
	Reverse Action	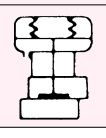	40～200 (0.4～2.0)		240 (2.4)	40 (0.4)	Without
			–	60～220 (0.6～2.2)	280 (2.8)	60 (0.6)	
			80～200 (0.8～2.0)	80～240 (0.8～2.4)		80 (0.8)	
			–	100～220 (1.0～2.2)		100 (1.0)	
			※120～280 (1.2～2.8)	–	400 (4.0)	120 (1.2)	

※Spring Range is available for actuator size N33S and N40.

2 Allowable Shut-off Pressure

■ GPP, GHT, GHG, CSV

Unit : MPa (kgf/cm²)

02G/C Contoured Plug (Throtting)

Port Size		15 (mm)	20	25	40	50	65	80	100	125	150
Actuator Size	Off-balance	½ (in.)	¾	1	1½	2	2½	3	4	5	6
N24	20(0.2)	2.05(21)	0.98(10)	0.69(7.1)	0.34(3.5)	0.20(2.1)	0.13(1.4)				
	40(0.4)	4.11(42)	1.96(20)	1.37(14)	0.69(7.1)	0.41(4.2)	0.27(2.8)				
	80(0.8)	8.23(84)	4.02(41)	2.74(28)	1.37(14)	0.83(8.5)	0.55(5.7)				
	100(1.0)	9.80(100)	5.09(52)	3.43(35)	1.66(17)	0.98(10)	0.69(7.1)				
N28	20(0.2)	2.64(27)	1.27(13)	0.90(9.2)	0.45(4.6)	0.26(2.7)	0.17(1.8)	0.12(1.3)	0.06(0.7)		
	40(0.4)	5.29(54)	2.64(27)	1.76(18)	0.90(9.2)	0.53(5.5)	0.35(3.6)	0.25(2.6)	0.14(1.5)		
	80(0.8)	9.80(100)	5.29(54)	3.53(36)	1.76(18)	1.07(11)	0.71(7.3)	0.50(5.2)	0.29(3.0)		
	100(1.0)		6.57(67)	4.51(46)	2.25(23)	1.27(13)	0.90(9.2)	0.64(6.6)	0.37(3.8)		
N33S	20(0.2)	3.92(40)	1.96(20)	1.27(13)	0.65(6.7)	0.39(4.0)	0.26(2.7)	0.18(1.9)	0.10(1.1)		
	40(0.4)	7.84(80)	3.92(40)	2.64(27)	1.27(13)	0.79(8.1)	0.52(5.4)	0.37(3.8)	0.21(2.2)		
	80(0.8)	9.80(100)	7.84(80)	5.29(54)	2.64(27)	1.56(16)	0.98(10)	0.75(7.7)	0.44(4.5)		
	100(1.0)		9.80(100)	6.57(67)	3.23(33)	1.96(20)	1.27(13)	0.95(9.7)	0.54(5.6)		
	120(1.2)			7.98(81)	3.99(40)	2.40(24)	1.60(16)	1.14(11)	0.66(6.7)		
N40	20(0.2)				0.93(9.5)	0.55(5.7)	0.37(3.8)	0.26(2.7)	0.14(1.5)	0.09(1.0)	0.06(0.7)
	40(0.4)				1.86(19)	1.07(11)	0.74(7.6)	0.52(5.4)	0.30(3.1)	0.19(2.0)	0.13(1.4)
	80(0.8)				3.72(38)	2.15(22)	1.47(15)	0.98(10)	0.61(6.3)	0.40(4.1)	0.28(2.9)
	100(1.0)				4.60(47)	2.74(28)	1.86(19)	1.27(13)	0.77(7.9)	0.50(5.1)	0.35(3.6)
	120(1.2)				5.62(57)	3.38(34)	2.25(22)	1.60(16)	0.93(9.5)	0.60(6.1)	0.42(4.3)
500	20(0.2)				1.47(15)	0.93(9.5)	0.61(6.3)	0.44(4.5)	0.25(2.6)	0.16(1.7)	0.11(1.2)
	40(0.4)				3.04(31)	1.86(19)	1.17(12)	0.89(9.1)	0.51(5.3)	0.33(3.4)	0.23(2.4)
	60(0.6)				4.60(47)	2.74(28)	1.86(19)	1.27(13)	0.77(7.9)	0.50(5.1)	0.35(3.6)
	80(0.8)				6.17(63)	3.72(38)	2.45(25)	1.76(18)	0.98(10)	0.66(6.8)	0.47(4.8)
	100(1.0)				7.83(79)	4.70(47)	3.13(31)	2.23(22)	1.30(13)	0.84(8.6)	0.59(6.0)
650	40(0.4)							1.47(15)	0.90(9.2)	0.57(5.9)	0.41(4.2)
	60(0.6)							2.25(23)	1.27(13)	0.87(8.9)	0.61(6.3)
	80(0.8)							3.04(31)	1.76(18)	1.07(11)	0.82(8.4)
	100(1.0)							3.88(39)	2.26(23)	1.46(14)	1.03(10)

Unit : MPa (kgf/cm²)

02G/C Quick Opening

Port Size		15 (mm)	20	25	40	50	65	80	100	125	150
Actuator Size	Off-balance	½ (in.)	¾	1	1½	2	2½	3	4	5	6
N24	40(0.4)	3.33(34)	1.66(17)	1.07(11)	0.54(5.6)	0.31(3.2)	0.20(2.1)				
	80(0.8)	6.76(69)	3.33(34)	2.15(22)	1.07(11)	0.62(6.4)	0.41(4.2)				
	100(1.0)	8.53(87)	4.21(43)	2.74(28)	1.37(14)	0.78(8.0)	0.51(5.3)				
N28	40(0.4)	4.41(45)	2.15(22)	1.37(14)	0.71(7.3)	0.40(4.1)	0.26(2.7)	0.18(1.9)	0.10(1.1)		
	80(0.8)	8.82(90)	4.41(45)	2.84(29)	1.37(14)	0.81(8.3)	0.53(5.5)	0.37(3.8)	0.22(2.3)		
	100(1.0)	9.80(100)	5.49(56)	3.53(36)	1.76(18)	0.98(10)	0.67(6.9)	0.47(4.8)	0.28(2.9)		
N33S	40(0.4)	6.47(66)	3.23(33)	2.05(21)	0.98(10)	0.59(6.1)	0.39(4.0)	0.27(2.8)	0.16(1.7)		
	80(0.8)	9.80(100)	6.47(66)	4.21(43)	2.05(21)	1.17(12)	0.79(8.1)	0.54(5.6)	0.34(3.5)		
	100(1.0)		8.13(83)	5.19(53)	2.54(26)	1.47(15)	0.98(10)	0.69(7.1)	0.42(4.3)		
	120(1.2)		9.80(100)	6.35(64)	3.17(32)	1.81(18)	1.20(12)	0.83(8.5)	0.51(5.2)		
N40	40(0.4)				1.47(15)	0.84(8.6)	0.55(5.7)	0.39(4.0)	0.23(2.4)	0.16(1.7)	0.11(1.2)
	80(0.8)				2.94(30)	1.66(17)	1.07(11)	0.78(8.0)	0.48(4.9)	0.33(3.4)	0.23(2.4)
	100(1.0)				3.62(37)	2.05(21)	1.37(14)	0.98(10)	0.59(6.1)	0.42(4.3)	0.29(3.0)
	120(1.2)				4.46(45)	2.25(26)	1.69(17)	1.17(12)	0.72(7.3)	0.50(5.1)	0.35(3.6)
500	40(0.4)				2.45(25)	1.37(14)	0.94(9.6)	0.64(6.6)	0.40(4.1)	0.27(2.8)	0.19(2.0)
	60(0.6)				3.62(37)	2.05(21)	1.37(14)	0.98(10)	0.59(6.1)	0.42(4.3)	0.29(3.0)
	80(0.8)				4.90(50)	2.74(28)	1.86(19)	1.27(13)	0.80(8.2)	0.55(5.7)	0.39(4.0)
	100(1.0)				6.20(63)	3.55(36)	2.35(23)	1.63(16)	1.00(10)	0.70(7.1)	0.49(5.0)
650	40(0.4)							1.07(11)	0.69(7.1)	0.48(4.9)	0.34(3.5)
	60(0.6)							1.66(17)	0.98(10)	0.72(7.4)	0.50(5.2)
	80(0.8)							2.25(23)	1.37(14)	0.97(9.9)	0.68(7.0)
	100(1.0)							2.84(29)	1.74(17)	1.22(12)	0.86(8.7)

【Notes】 (1) Unit of off-balance is kPaG (kgf/cm²G).
(2) For the 650 actuator and on-off control, the minmum off-balance is 40 kPaG (0.4kgf/cm²G).
(3) The Max. available differential pressure value in this table indicates the static shutoff pressure. If the differential pressure is large, it may cause unstable action, erosion or cavitation. Therefore, for sizing, be sure to contact our sales office.
(4) For flow direction of flow-to close, spring range 20 ~ 98kPaG (0.2 ~ 1.0kgf/cm²G) is not available.
(5) The frame "▭" indicates the standard combination of the body (at full port) and actuator.
(6) Off-balance 100 kPaG (1.0kgf/cm²G) is applied only to direct action for the actuator size N24, N28, N33S and N40.
(7) This table shows the value as to standard gland packing (P4519 + V7010).
(8) When tight shut off (T.S.O.) is specified for contoured or V-port plug, allowable shut-off pressure is selected to multiply the value in above table by 1/1.2.
(9) The above table is not available for bellows bonnet valve.
(10) When "Use no oil", Bellow Seal Bonnet or special Gland Packing is required Off-balance 120kPaG (1.2kgf/cm²G) is not applicable.

■ GCV-S, GCS-S

Unit ： MPaG (kgf/cm²G)

02-GCV-S,-GCS-S Single Seated Type											
Port Size		20 (mm)	25	32	40	50	65	80	100	125	150
Actuator Size	Off-balance	3/4 (in.)	1	1 1/4	1 1/2	2	2 1/2	3	4	5	6
N24	20(0.2)	0.97(9.9)	0.67(6.9)	0.45(4.6)	0.33(3.4)	0.20(2.1)	0.12 (1.3)				
	40(0.4)	1.86(19)	1.27(13)	0.91(9.3)	0.67(6.9)	0.41(4.2)	0.25 (2.6)				
	80(0.8)	3.82(39)	2.64(27)	1.76(18)	1.27(13)	0.83(8.5)	0.50 (5.2)				
	100(1.0)	4.80(49)	3.33(34)	2.25(23)	1.66(17)	0.98(10)	0.63(6.5)				
N28	20(0.2)	1.17(12)	0.88(9.0)	0.58(6.0)	0.43(4.4)	0.26(2.7)	0.16(1.7)	0.11(1.2)	0.06(0.7)		
	40(0.4)	2.45(25)	1.76(18)	1.17(12)	0.87(8.9)	0.53(5.5)	0.33(3.4)	0.24(2.5)	0.14(1.5)		
	80(0.8)	5.00(51)	3.53(36)	2.35(24)	1.66(17)	1.07(11)	0.66(6.8)	0.50(5.1)	0.29(3.0)		
	100(1.0)	6.27(64)	4.41(45)	2.94(30)	2.15(22)	1.27(13)	0.83(8.5)	0.62(6.4)	0.37(3.8)		
N33S	20(0.2)	1.86(19)	1.27(13)	0.86(8.8)	0.64(6.6)	0.39(4.0)	0.24(2.5)	0.17(1.8)	0.10(1.1)		
	40(0.4)	3.72(38)	2.54(26)	1.66(17)	1.27(13)	0.79(8.1)	0.49(5.0)	0.36(3.7)	0.21(2.2)		
	80(0.8)	7.45(76)	5.19(53)	3.43(35)	2.54(26)	1.56(16)	0.98(10)	0.73(7.5)	0.43(4.4)		
	100(1.0)	9.31(95)	6.47(66)	4.31(44)	3.23(33)	1.96(20)	1.17(12)	0.92(9.4)	0.54(5.6)		
	120(1.2)	9.80 (100)	7.84(80)	5.22(53)	3.89(39)	2.40(24)	1.47(15)	1.10(11)	0.65(6.7)		
N40	20(0.2)			1.17(12)	0.91(9.3)	0.55(5.7)	0.34(3.5)	0.25(2.6)	0.14(1.5)	0.09(1.0)	0.06(0.7)
	40(0.4)			2.54(25)	1.76(18)	1.07(11)	0.68(7.0)	0.51(5.3)	0.30(3.1)	0.19(2.0)	0.13(1.4)
	80(0.8)			4.90(50)	3.62(37)	2.25(23)	1.37(14)	0.98(10)	0.61(6.3)	0.40(4.1)	0.28(2.9)
	100(1.0)			6.08(62)	4.51(46)	2.74(28)	1.66(17)	1.27(13)	0.76(7.8)	0.50(5.2)	0.35(3.6)
	120(1.2)			7.35(75)	5.48(55)	3.39(34)	2.07(21)	1.56(15)	0.92(9.4)	0.61(6.2)	0.43(4.4)
500	20(0.2)				1.47(15)	0.94(9.6)	0.56(5.8)	0.43(4.4)	0.25(2.6)	0.16(1.7)	0.11(1.2)
	40(0.4)				3.04(31)	1.86(19)	1.07(11)	0.86(8.8)	0.50(5.2)	0.33(3.4)	0.23(2.4)
	60(0.6)				4.51(46)	2.74(28)	1.66(17)	1.27(13)	0.77(7.9)	0.50(5.2)	0.35(3.6)
	80(0.8)				6.08(62)	3.72(38)	2.25(23)	1.66(17)	0.98(10)	0.67(6.9)	0.48(4.9)
	100(1.0)				7.62(77)	4.71(48)	2.88(29)	2.17(22)	1.29(13)	0.85(8.6)	0.60(6.1)
650	40(0.4)							1.47(15)	0.89(9.1)	0.58(6.0)	0.41(4.2)
	60(0.6)							2.25(23)	1.27(13)	0.88(9.0)	0.62(6.4)
	80(0.8)							2.94(30)	1.76(18)	1.17(12)	0.83(8.5)
	100(1.0)							3.76(38)	2.23(22)	1.47(15)	1.04(10)

【Notes】 (1) Unit of off-balance is kPaG (kgf/cm²G) .
(2) The frame "▭" indicates the standard combination of the body (at full port) and actuator.
(3) Off-balance 100 kPaG (1.0kgf/cm²G) is applied only to direct action for the actuator size N24, N28, N33S and N40.
(4) This table shows the value as to standard gland packing (P4519 + V7010).
(5) When tight shut off (T.S.O.) is specified for contoured or V-port plug, allowable shut-off pressure is selected to multiply the value in above table by 1/1.2.
(6) Please contact our sales office to allowable shut-off pressure for GCV-BS, -BSH & GCS-BS, -BSH type.
(7) In case of single seated type, if flow direction is F.T.C. (Flow to close), it's necessary to check with medium pressure. Please contact our sales office.
(8) When "Use no oil", Bellow Seal Bonnet or special Gland Packing is required Off-balance 120kPaG (1.2kgf/cm²G) is not applicable.

3 Off-balance Classification

■ BS

単位： kPaG (kgf/cm²G)

Action	Spring Range Actuator Size N28 ～ N40	Spring Range Actuator Size 500 ～ 650	Supply Air Pressure	Off-balance	Positioner
Direct Action	40 ～ 200 (0.4 ～ 2.0)		240 (2.4)	40 (0.4)	with
	–	60 ～ 220 (0.6 ～ 2.2)	280 (2.8)	60 (0.6)	
	40 ～ 200 (0.4 ～ 2.0)	40 ～ 200 (0.4 ～ 2.0)		80 (0.8)	
		–	300 (3.0)	100 (1.0)	
	–	20 ～ 180 (0.2 ～ 1.8)	280 (2.8)		
	120 ～ 280 (1.2 ～ 2.8)	–	400 (4.0)	120 (1.2)	with out
Reverss Action	40 ～ 200 (0.4 ～ 2.0)		240 (2.4)	40 (0.4)	with
	–	60 ～ 220 (0.6 ～ 2.2)	280 (2.8)	60 (0.6)	
	80 ～ 200 (0.8 ～ 2.0)	80 ～ 240 (0.8 ～ 2.4)		80 (0.8)	
	–	100 ～ 220 (1.0 ～ 2.2)		100 (1.0)	
	120 ～ 280 (1.2 ～ 2.8)	–	400 (4.0)	120 (1.2)	with out

■ BSH

単位： kPaG (kgf/cm²G)

Action	N28 ～ N40	500 ～ 650	Supply Air Pressure	Off-balance	Positioner
Direct Action	80 ～ 200 (0.8 ～ 2.0)		280 (2.8)	80 (0.8)	with
	80 ～ 200 (0.8 ～ 2.0)		300 (3.0)	100 (1.0)	
	120 ～ 280 (1.2 ～ 2.8)	–	400 (4.0)	120 (1.2)	with out
Reverss Action	80 ～ 200 (0.8 ～ 2.0)	80 ～ 240 (0.8 ～ 2.4)	280 (2.8)	80 (0.8)	with
	–	100 ～ 220 (1.0 ～ 2.2)		100 (1.0)	
	120 ～ 280 (1.2 ～ 2.8)	–	400 (4.0)	120 (1.2)	with out

4 Allowable Shut-off Pressure

■ BS

(1) Allowable Shut-off Pressure

Unit : MPa (kgf/cm²)

Actuator Size	Body Size	50 (mm)	65	80	100	125	150
	Off-balance	2 (inch)	2 1/2	3	4	5	6
N28	40 (0.4)	1.96 (20)	1.37 (14)	1.18 (12)	0.83 (8.5)		
	80 (0.8)	3.92 (40)	2.74 (28)	2.35 (24)	1.67 (17)		
	100 (1.0)	5.00 (51)	3.43 (35)	2.94 (30)	2.06 (21)		
N33S	40 (0.4)	2.94 (30)	1.96 (20)	1.77 (18)	1.17 (12)		
	80 (0.8)	5.88 (60)	4.02 (41)	3.53 (36)	2.45 (25)		
	100 (1.0)	7.35 (75)	5.09 (52)	4.41 (45)	3.04 (31)		
	120 (1.2)	8.82 (90)	6.08 (62)	5.29 (54)	3.62 (37)		
N40	40 (0.4)	4.11 (42)	2.84 (29)	2.45 (25)	1.66 (17)	1.37 (14)	1.18 (12)
	80 (0.8)	8.23 (84)	5.78 (59)	4.90 (50)	3.43 (35)	2.75 (28)	2.25 (23)
	100 (1.0)	9.80 (100)	7.15 (73)	6.17 (63)	4.31 (44)	3.43 (35)	2.87 (29)
	120 (1.2)		8.62 (88)	7.45 (76)	5.19 (53)	4.11 (42)	3.43 (35)
500	40 (0.4)	6.86 (70)	4.81 (49)	4.12 (42)	2.84 (29)	2.25 (23)	1.86 (19)
	60 (0.6)	9.80 (100)	7.15 (73)	6.17 (63)	4.31 (44)	3.43 (35)	2.84 (29)
	80 (0.8)		9.61 (98)	8.33 (85)	5.78 (59)	4.60 (47)	3.82 (39)
	100 (1.0)		9.80 (100)	9.80 (100)	7.15 (73)	5.78 (59)	4.80 (49)
650	40 (0.4)			7.15 (73)	5.00 (51)	4.02 (41)	3.33 (34)
	60 (0.6)			9.80 (100)	7.45 (76)	5.98 (61)	5.00 (51)
	80 (0.8)					8.04 (82)	6.76 (69)
	100 (1.0)					9.80 (100)	8.43 (86)

【Note】 When tight shut off （T.S.O. : 0.001% or 0.002%） is requied for On-Off port or Throttle port for Type BS, Allowable Shut-Off Pressure shall be multiplied by 1/1.2 from the table above.

(2) Allowable Seat Leakage Ratio : ANSI/FCI Class V (Oprion)

Unit : MPa (kgf/cm²)

Actuator Size	Body Size	50 (mm)	65	80	100	125	150
	Off-balance	2 (inch)	2 1/2	3	4	5	6
N28	80 (0.8)	3.23 (33)	2.25 (23)				
	100 (1.0)	4.11 (42)	2.84 (29)				
N33S	80 (0.8)	4.90 (50)	3.33 (34)	2.94 (30)	1.96 (20)		
	100 (1.0)	6.08 (62)	4.21 (43)	3.62 (37)	2.45 (25)		
	120 (1.2)	7.35 (75)	5.00 (51)	4.41 (45)	2.94 (30)		
N40	80 (0.8)	6.86 (70)	4.80 (49)	4.02 (41)	2.84 (29)	2.25 (23)	
	100 (1.0)	8.62 (88)	5.88 (60)	5.09 (52)	3.53 (36)	2.84 (29)	
	120 (1.2)	9.80 (100)	7.15 (73)	6.17 (63)	4.31 (44)	3.43 (35)	2.84 (29)
500	60 (0.6)	8.62 (88)				3.43 (35)	—
	80 (0.8)	9.80 (100)	7.94 (81)	6.86 (70)	4.80 (49)	3.82 (39)	3.13 (32)
	100 (1.0)		9.80 (100)	8.62 (88)	5.88 (60)	4.80 (49)	3.92 (40)
650	60 (0.6)			9.02 (92)	6.17 (63)	4.90 (50)	4.11 (42)
	80 (0.8)			9.80 (100)	8.33 (85)	6.66 (68)	5.58 (57)
	100 (1.0)				9.80 (100)	8.33 (85)	6.96 (71)

■ BSH

Unit : MPa (kgf/cm²)

Actuator Size	Body Size	50 (mm)	65	80	100	125	150
	Off-balance	2 (inch)	2 1/2	3	4	5	6
N28	80 (0.8)	3.53 (36)	2.35 (24)				
	100 (1.0)	4.51 (46)	3.04 (31)				
N33S	80 (0.8)	5.39 (55)	3.62 (37)	3.04 (31)	2.05 (21)		
	100 (1.0)	6.86 (70)	4.70 (48)	3.92 (40)	2.64 (27)		
	120 (1.2)	8.33 (85)	5.68 (59)	4.80 (49)	3.23 (33)		
N40	80 (0.8)	7.74 (79)	5.29 (54)	4.51 (46)	3.04 (31)	2.35 (24)	1.86 (19)
	100 (1.0)	9.80 (100)	6.76 (69)	5.87 (59)	3.92 (40)	3.04 (31)	2.45 (25)
	120 (1.2)		8.23 (84)	6.96 (71)	4.80 (49)	3.72 (38)	3.04 (31)
500	80 (0.8)		9.21 (94)	7.84 (80)	5.39 (55)	4.21 (43)	3.43 (35)
	100 (1.0)		9.80 (100)		6.76 (69)	5.39 (55)	4.41 (45)
650	80 (0.8)			9.80 (100)	9.61 (98)	7.64 (78)	6.37 (65)
	100 (1.0)				9.80 (100)	9.70 (99)	8.04 (82)

【Notes】 (1) ▭ portion shows standard combination of valve Body and Actuator.
(2) The Unit of off-balance is kPaG(kgf/cm²G).
(3) On type BS, Actuator Size N40, Off-balance 80kPaG(0.8 kgf/cm²G), above Shut-off Pressure is not applicable for reverse action Type with rated travel 65mm.
(4) Shut-off pressure of this table shows the value only with standard gland packing. (P4519 + V7010)
(5) On Bellow Seal Bonnet valve, Allowable Shut-Off Pressure is differed from above table because of Bellows effective area.
(6) Off-Balance 120kPaG(1.2kgf/cm²G) is not applicable for Actuator N40 with rated travel 65mm.
(7) Actuator size N33S & N40 with Off-Balance 120kPaG(1.2kgf/cm²G) is only applicable for type CQ-BS and CQ-BSH.
(8) On Model 83A-BS, seat leakage class V and Off-balanse 40kPaG(0.4kgf/cm²G) is not applicable.
On Model 83A-BSH, Off-balanse is not applicable lower than 60kPaG(0.6kgf/cm²G).
(9) When Off-Balance is 100kPaG(1.0kgf/cm²G) on reverse action actuator size 500 ~ 650, Spring Range may differs by actuator size and valve rated travel.
(10) For Model 83BS, seat leakage class V and for "Use no oil" application, smallest actuator size is N33S.

■ Type GCP-S

Contoured Single Seated

Unit : MPa (kgf/cm²)

83A CP-S (Contoured)												
Actuator Size	Valve Size	φ 4	6 (mm)	7	8	10	15	20	25	32	40	50
	Off-balance		1/8 (inch)	3/16	1/4	3/8	1/2	3/4	1	1 1/4	1 1/2	2
N24	20 (0.2)	7.35 (75)	6.96 (71)		4.60 (47)	3.04 (31)	1.86 (19)	0.98 (10)	0.69 (7.1)	0.47 (4.8)	0.34 (3.5)	0.21 (2.1)
	40 (0.4)	9.80 (100)			9.21 (94)	6.17 (63)	3.72 (38)	1.96 (20)	1.37 (14)	0.95 (9.7)	0.69 (7.1)	0.42 (4.2)
	80 (0.8)				9.80 (100)		7.45 (76)	4.02 (41)	2.74 (28)	1.86 (19)	1.37 (14)	0.83 (8.5)
	100 (1.0)						9.41 (96)	5.09 (52)	3.43 (35)	2.35 (24)	1.66 (17)	1.04 (10.7)
N28	20 (0.2)		9.02 (92)		5.98 (61)	4.02 (41)	2.35 (24)	1.27 (13)	0.90 (9.2)	0.61 (6.3)	0.45 (4.6)	0.27 (2.7)
	40 (0.4)		9.80 (100)			8.04 (82)	4.80 (49)	2.64 (27)	1.76 (18)	1.17 (12)	0.90 (9.2)	0.54 (5.5)
	80 (0.8)					9.80 (100)		5.29 (54)	3.53 (36)	2.45 (25)	1.76 (18)	1.08 (11.0)
	100 (1.0)							6.66 (68)	4.51 (46)	3.04 (31)	2.25 (23)	1.36 (13.8)
N33S	20 (0.2)				7.94 (81)	5.88 (60)	3.53 (36)	1.96 (20)	1.27 (13)	0.90 (9.2)	0.66 (6.8)	0.40 (4.0)
	40 (0.4)				9.80 (100)		7.15 (73)	3.92 (40)	2.64 (27)	1.76 (18)	1.27 (13)	0.81 (8.1)
	80 (0.8)						9.80 (100)	7.84 (80)	5.29 (54)	3.62 (37)	2.64 (27)	1.60 (16.3)
	100 (1.0)							9.80 (100)	6.57 (67)	4.51 (46)	3.33 (34)	2.00 (20.4)
	120 (1.2)								7.94 (81)	5.39 (55)	3.92 (40)	2.40 (24.4)
N40	20 (0.2)					4.90 (50)		2.74 (28)	1.86 (19)	1.27 (13)	0.93 (9.5)	0.56 (5.7)
	40 (0.4)					9.80 (100)		5.49 (58)	3.72 (38)	2.54 (26)	1.86 (19)	1.12 (11.4)
	80 (0.8)							9.80 (100)	7.45 (76)	5.09 (52)	3.72 (38)	2.25 (22.9)
	100 (1.0)								9.31 (95)	6.37 (65)	4.60 (47)	2.81 (28.7)
	120 (1.2)								9.80 (100)	7.64 (78)	5.58 (57)	3.38 (34.4)
500	20 (0.2)						6.08 (62)	4.60 (47)	3.04 (31)	2.05 (21)	1.47 (15)	0.94 (9.5)
	40 (0.4)						9.80 (100)	9.22 (94)	6.17 (63)	4.21 (43)	3.04 (31)	1.88 (19.1)
	60 (0.6)							9.80 (100)	9.31 (95)	6.37 (65)	4.60 (47)	2.82 (28.7)
	80 (0.8)								9.80 (100)	8.53 (87)	6.17 (63)	3.76 (38.3)
	100 (1.0)									9.80 (100)	7.74 (79)	4.70 (47.9)

Quick-Opening

Unit : MPa (kgf/cm²)

83A CP-S (Quick-Opening)									
Actuator Size	Valve Size	8 (mm)	10	15	20	25	32	40	50
	Off-balance	1/4 (inch)	3/8	1/2	3/4	1	1 1/4	1 1/2	2
N24	40 (0.4)	7.74 (79)	5.09 (52)	3.13 (32)	1.66 (17)	1.07 (11)	0.79 (8.1)	0.57 (5.9)	0.35 (3.5)
	80 (0.8)	9.80 (100)		6.27 (64)	3.33 (34)	2.25 (23)	1.56 (16)	1.07 (11)	0.70 (7.1)
	100 (1.0)			7.84 (80)	4.21 (43)	2.84 (29)	1.96 (20)	1.37 (14)	0.87 (8.9)
N28	40 (0.4)		6.66 (68)	4.02 (41)	2.15 (22)	1.47 (15)	0.98 (10)	0.75 (7.7)	0.45 (4.6)
	80 (0.8)	9.80 (100)		8.13 (83)	4.41 (45)	2.94 (30)	2.05 (21)	1.47 (15)	0.90 (9.2)
	100 (1.0)			9.80 (100)	5.49 (56)	3.72 (38)	2.54 (26)	1.86 (19)	1.13 (11.5)
N33S	40 (0.4)		9.80 (100)	5.98 (61)	3.23 (33)	2.15 (22)	1.47 (15)	1.07 (11)	0.66 (6.8)
	80 (0.8)			9.80 (100)	6.47 (66)	4.41 (45)	2.94 (30)	2.15 (22)	1.33 (13.6)
	100 (1.0)				8.13 (83)	5.49 (56)	3.72 (38)	2.74 (28)	1.66 (17.0)
	120 (1.2)				9.80 (100)	6.57 (67)	4.51 (46)	3.33 (34)	2.00 (20.4)
N40	40 (0.4)			8.43 (86)	4.51 (46)	3.04 (31)	2.05 (21)	1.47 (15)	0.93 (9.5)
	80 (0.8)			9.80 (100)	9.12 (93)	6.17 (63)	4.21 (43)	3.04 (31)	1.87 (19.1)
	100 (1.0)				9.80 (100)	7.74 (79)	5.29 (54)	3.82 (39)	2.34 (23.9)
	120 (1.2)					9.31 (95)	6.37 (65)	4.60 (47)	2.81 (28.7)
500	40 (0.4)			9.80 (100)	7.64 (78)	5.19 (53)	3.53 (36)	2.54 (26)	1.56 (15.9)
	60 (0.6)				9.80 (100)	7.74 (79)	5.29 (54)	3.82 (39)	2.35 (23.9)
	80 (0.8)					9.80 (100)	7.06 (72)	5.19 (53)	3.13 (31.9)
	100 (1.0)						8.92 (91)	6.47 (66)	3.91 (39.9)

■ Type CP-S-RT

Labyrinth Trim Type

Unit : MPa (kgf/cm²)

83A CP-S-RT (Labyrinth)											
Actuator Size	Off-balance	Port Size (Rated Cv)									
		0.2	0.4	0.6	1	1.5	2	3	5.2	9	12
N24	20 (0.2)	3.92 (40)		2.94 (30)	1.96 (20)			0.96 (9.8)			
	40 (0.4)	7.84 (80)		5.98 (61)	4.02 (41)			1.86 (19)			
	80 (0.8)	9.80 (100)			8.04 (82)			3.82 (39)			
	100 (1.0)				9.80 (100)			4.80 (49)			
N28	20 (0.2)	5.00 (51)		3.92 (40)	2.54 (26)			1.17 (12)		0.35 (3.6)	0.21 (2.2)
	40 (0.4)	9.80 (100)		7.84 (80)	5.19 (53)			2.45 (25)		0.70 (7.2)	0.43 (4.4)
	80 (0.8)			9.80 (100)				4.90 (50)		1.37 (14)	0.86 (8.8)
	100 (1.0)							6.17 (63)		1.76 (18)	1.08 (11)
N33S	20 (0.2)	7.45 (76)		5.78 (59)	3.82 (39)			1.76 (18)		0.51 (5.3)	0.31 (3.2)
	40 (0.4)	9.80 (100)			7.64 (78)			3.62 (37)		0.98 (10)	0.63 (6.4)
	80 (0.8)				9.80 (100)			7.25 (74)		2.05 (21)	1.27 (12.9)
	100 (1.0)							9.12 (93)		2.45 (25)	1.58 (16.2)
	120 (1.2)							9.80 (100)		3.13 (32)	1.90 (19.4)
N40	20 (0.2)				4.90 (50)			2.54 (26)		0.73 (7.5)	0.44 (4.5)
	40 (0.4)				9.80 (100)			5.09 (52)		1.47 (15)	0.89 (9.1)
	80 (0.8)							9.80 (100)		2.94 (30)	1.79 (18.2)
	100 (1.0)									3.62 (37)	2.23 (22.8)
	120 (1.2)									4.41 (45)	2.68 (27.3)
500	20 (0.2)				6.08 (62)			4.31 (44)		1.17 (12)	0.74 (7.6)
	40 (0.4)				9.80 (100)			8.62 (88)		2.45 (25)	1.49 (15.2)
	60 (0.6)							9.80 (100)		3.62 (37)	2.24 (22.8)
	80 (0.8)									4.90 (50)	2.98 (30.4)
	100 (1.0)									6.08 (62)	3.73 (38.0)
650	40 (0.4)									4.21 (43)	2.59 (26.4)
	60 (0.6)									6.37 (65)	3.88 (39.6)
	80 (0.8)									8.53 (87)	5.18 (52.8)
	100 (1.0)									9.80 (100)	6.48 (66.0)

【Notes】 (1) ▭ portion shows standard combination of valve Body and Actuator.

(2) The Unit of Off-balance is kPaG (kgf/cm²G).

(3) Shut-off pressure of this table shows the value only with standard gland packing (P4519 + V7010).

(4) On Bellows Seal Bonnet valve, allowable Shut-off pressure is differed from above table.

(5) When "Use no oil", Bellow Seal Bonnet or special Gland Packing is required Off-balance 120kPaG (1.2 kgf/cm²G) is not applicable.

(6) On type GCP-S port size 15mm (1/2") or larger and type GCP-S-RT port size Cv = 3 or larger, when ANSI/FCI class V is required, Actuator size should be N28 or larger.

8. MAIN DIMENSIONS AND WEIGHT

8.1 G Series

1 Face-to-center Dimensions of Valve

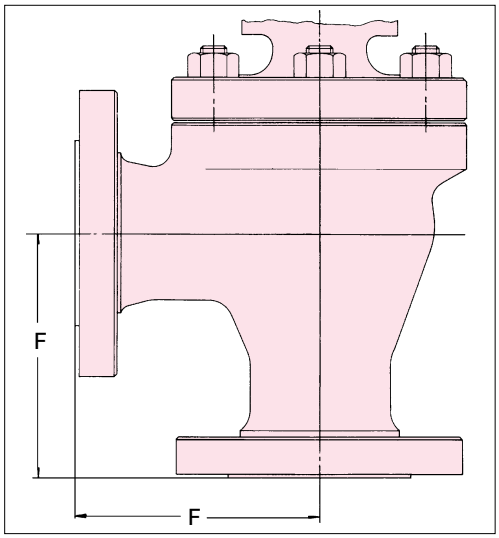

Unit : mm

Pressure Rating / Valve Size (mm)	F		
	JIS 10K, 20K ASME 150RF 300RF	JIS 30K,40K ASME 300RJ 400, 600RF	ASME 400RJ 600RJ
20	97	103	103
25	98	105	105
40	117	125	125
50	133	143	145
65	146	156	158
80	159	168	170
100	184	197	200
125	212	228	230
150	237	254	256

2 Standard Dimensions & Weight

■ Plain Bonnet, Fin Bonnet

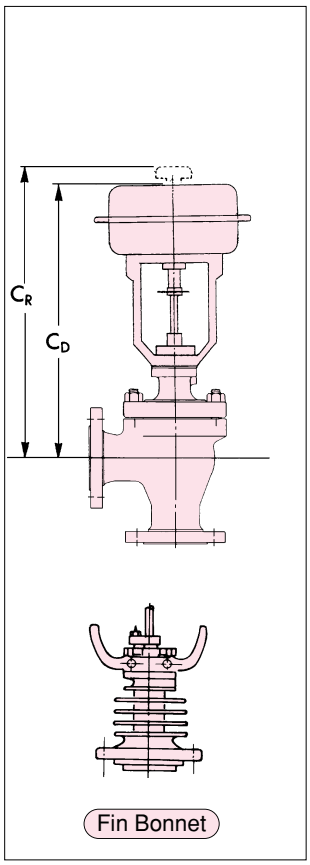

Unit : mm

Valve Size (mm)	Valve Size (in.)	Height / Actuater / Bonnet / Action	C_D(DA), C_R(RA) N24 Plain	N24 Fin	N28 Plain	N28 Fin	N33S Plain	N33S Fin	N40 Plain	N40 Fin	500 Plain	500 Fin	650 Plain	650 Fin	Weight (Kg)
20	3/4	DA	415	470	455	510	510	565							25
		RA	440	495	480	535	535	590							
25	1	DA	415	470	455	510	510	565							30
		RA	440	495	480	535	535	590							
40	1 1/2	DA	420	490	460	530	515	585	690	735					35
		RA	445	515	485	555	540	610	715	760					
50	2	DA	435	505	475	545	530	600	685	750	905	970			40
		RA	460	530	500	570	552	625	710	775	1055	1120			
65	2 1/2	DA	450	515	490	535	545	610	695	765	915	980			55
		RA	470	540	510	580	565	635	720	785	1065	1135			
80	3	DA			520	600	575	655	725	790	945	1010	1240	1305	75
		RA			540	625	595	675	750	815	1100	1160	1480	1545	
100	4	DA			535	620	590	675	745	810	960	1030	1260	1325	110
		RA			560	645	615	695	765	835	1115	1180	1500	1565	
125	5	DA							785	850	1005	1070	1300	1365	190
		RA							810	875	1155	1220	1540	1605	
150	6	DA							795	860	1015	1075	1310	1375	255
		RA							820	885	1165	1230	1550	1615	

【Notes】 (1) As the weight, the approximate mass for a combination of ASME 300 body and the standard actuator is indicated. (Plain bonnet)
(2) The fin bonnet shall be used at the temperature ranging from − 20℃ to − 17℃ and at over 230℃.

■ Extension Bonnet（For cryogenic service − 196℃～− 20℃）

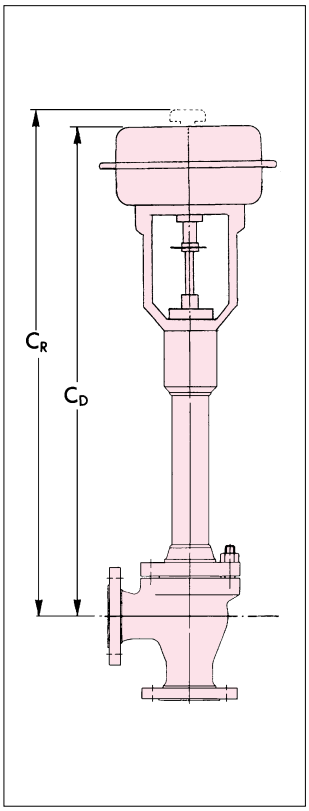

If the temperature is under − 20℃, the extension bonnet is used. The extension bonnet is available in two types according to the temperature, the type for the temperature range of − 100℃ and over to under − 20℃ and that for the temperature range of − 196℃ and over to under − 100℃.

Unit ： mm

Valve Size		Actuator Size	C_D(DA)		C_R(RA)		Approx. Weight (kg)
(mm)	(inch)		− 100℃ ～− 20℃	under − 100℃	− 100℃ ～ − 20℃	under − 100℃	
20 25	3/4 1	N24	720	980	745	1005	35
40	1 1/2	N24	725	990	750	1015	45
50	2		740	1000	760	1025	50
65	2 1/2		750	1015	775	1035	65
80	3	N28	860	1110	885	1135	95
100	4		880	1125	900	1150	130
125	5	N40	1245	1405	1270	1425	240
150	6		1265	1420	1285	1445	310

【Notes】(1) For face-to-center dimension A, see P.15.
(2) The approximate weight indicates the weight of the ASME 300 body with the standard Tactustor which is mounted on the extension bonnet for the temperature range.
(3) Stainless steel SUS 304 or SUS 316 is used for extension as the standard material.
(4) If the fluid temperature ranges from − 20 to − 17℃ and is over 230℃, the fin bonnet is used.

■ Bellows Seal Bonnet

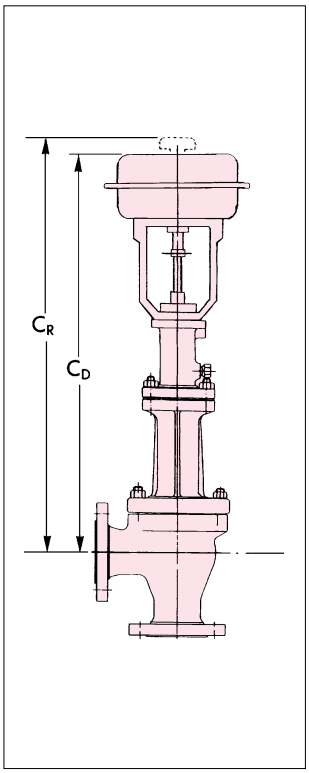

If the fluid is combustible or poisonous and it would cause hazardous problem, the leakage of the fluid from the gland must be prevented.
In this case, the bonnet with the bellows seal is used. The bellows is available in two kinds ; the formed bellows and the welded bellows.
Either type is used according to the fluid conditions.（See to page 6）

〔Bellows Specification〕

Atomic bellows（Welded Type）
①Pressure : 3.92MPaG（40kgf/cm²G） But, this is limited by temperature.
②Temperature : 350℃ or less
③Material : SUS316L

Unit ： mm

Valve Size		Actuator Size	C_D	C_R	Approx. Weight (kg)
(mm)	(inch)		Welded bellows	Welded bellows	
20 25	3/4 1	N24	675	1000	35
40	1 1/2	N24	705	730	40
50	2		750	775	50
65	2 1/2		760	785	60
80	3	N28	900	925	90
100	4		920	945	125
125	5	N40	1305	1330	210
150	6		1315	1340	285

8.2 C Series

1 CSV

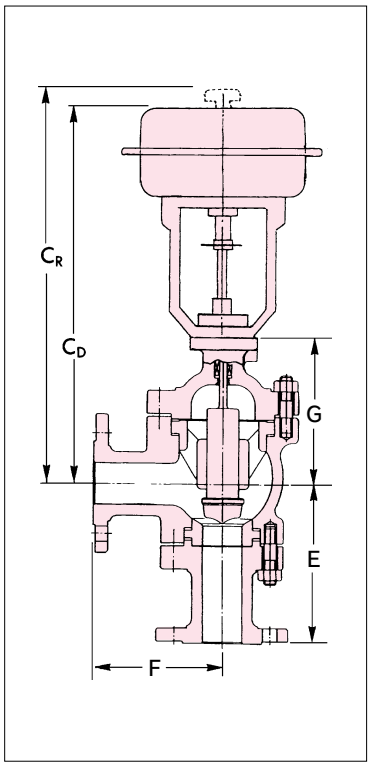

Face-to-Center

Unit : mm

Valve Size		JIS 10K RF ASME 150 RF		JIS 20K RF ASME 300 RF	
(mm)	(inch)	F	E	F	E
20	3/4	150	172	150	172
25	1	150	172	150	172
40	1 1/2	150	180	150	180
50	2	160	190	160	190
65	2 1/2	165	195	165	195
80	3	200	240	200	240
100	4	225	265	225	265
125	5	250	300	250	300
150	6	250	385	250	385

Dimension

Unit : mm

Valve Size		Actuator Size	G	C_D (DA)	C_R (RA)
(mm)	(inch)				
20	3/4	N24	148	450	470
25	1	N24	148	450	470
40	1 1/2	N24	148	450	470
50	2	N24	175	475	500
65	2 1/2	N24	175	475	500
80	3	N28	203	540	565
100	4	N28	204	545	565
125	5	N40	345	865	890
150	6	N40	390	910	935

2 CLA

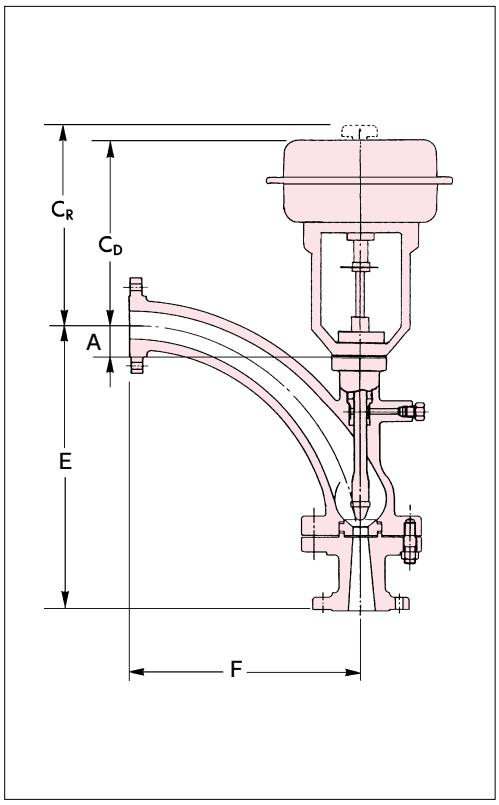

Face-to-Center

Unit : mm

Valve Size		Connection and Rating			
		JIS 10K RF ASME150 RF		JIS 20K RF ASME 300 RF	
(mm)	(inch)	F	E	F	E
20	3/4	150	235	150	235
25	1	170	265	170	265
40	1 1/2	170	310	170	310
50	2	205	400	205	400
65	2 1/2	225	400	225	400
80	3	300	440	300	440
100	4	300	470	300	470
125	5	400	500	400	500
150	6	400	570	400	570

Dimension

Unit : mm

Valve Size		Actuator Size	C_D (DA)	C_R (RA)
(mm)	(inch)			
20	3/4	N33S	405	430
25	1		430	455
40	1 1/2	N40	435	460
50	2		435	460
65	2 1/2	500S	435	460
80	3		525	550
100	4	650S	530	555
125	5		665	690
150	6		665	690

【Note】 Above table indicates the dimension for full port size body assemly with actuator.

9. JACKET

It is recommended to mount the jacket for the service of highly viscous or adhesive fluids.
Series C has a design available to mount a jacket and the body inside has a design not to cause the fluid to stay or adhere.
If the jacket is mounted, the piping shall be two sizes larger than the valve size.

Model 02 CLA Jaket

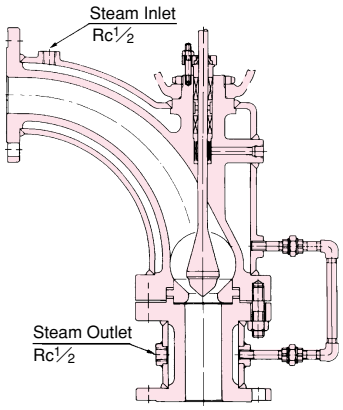

Model 02 CSV Jaket

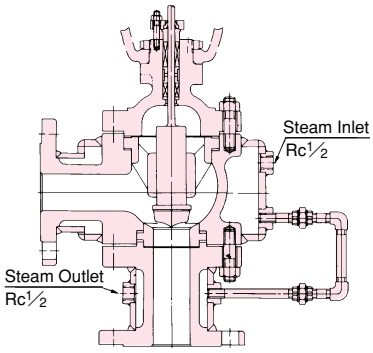

Valve Size & Piping Size Combination

Valve Size	Piping Size
20 (mm)	40 (mm)
25	50
40	65
50	80
65	100

Valve Size	Piping Size
80 (mm)	125 (mm)
100	150
125	150
150	200

10. MOUNTING ORIENTATIONS

Without Side-mounted Handwheel	With Side-mounted Handwheel
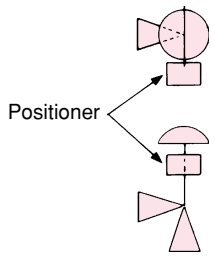	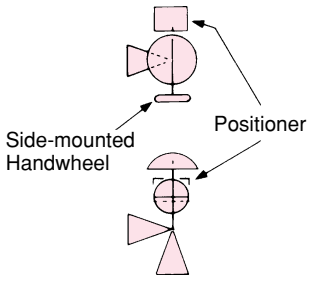

Bulletin No.MCE-B1201L

TRADE Emperor MARK 株式会社本山製作所

MOTOYAMA ENG. WORKS, LTD.

http://www.motoyama-cp.co.jp

本 社 工 場　〒981-3697 宮城県黒川郡大衡村大衡字亀岡5－2　TEL(022)344-4511(代表) / FAX(022)344-4522
E-mail : info@motoyama-cp.co.jp

Main Office & Factory　5-2, Ohira Aza Kameoka, Ohira-mura, Kurokawa-gun, Miyagi, 981-3697, Japan
TEL +81-22-344-4511 / FAX +81-22-344-4522
E-mail : info-overseas@motoyama-cp.co.jp

●販売・サービスネットワーク

東京支店	〒210-0007	神奈川県川崎市川崎区駅前本町 10-5 クリエ川崎 11F	TEL(044)381-8770(代表)	FAX(044)381-8772
大阪支店	〒550-0014	大阪市西区北堀江一丁目 12-19 クリモトビル 3F	TEL(06)6535-8111(代表)	FAX(06)6535-8655
国際営業部	〒210-0007	神奈川県川崎市川崎区駅前本町 10-5 クリエ川崎 11F	TEL(044)381-8771	FAX(044)381-8773
札幌営業所	〒001-0912	札幌市北区新琴似12条七丁目1-47 リバティタウンP棟101号	TEL(011)766-1520	FAX(011)766-1521
東北営業所 大衡サービスセンター	〒981-3697	宮城県黒川郡大衡村大衡字亀岡 5-2	TEL(022)344-1761	FAX(022)344-1762
上越営業所 上越サービスセンター	〒942-0036	新潟県上越市大字東中島2393番地	TEL(025)542-5151	FAX(025)542-5152
関東営業所 千葉サービスセンター	〒290-0046	千葉県市原市岩崎西一丁目5-19	TEL(0436)21-4400	FAX(0436)21-3540
静岡営業所	〒422-8033	静岡市駿河区登呂二丁目10-13 ハイツ富士1F	TEL(054)288-2237	FAX(054)288-2239
名古屋営業所 中部サービスセンター	〒481-0012	愛知県北名古屋市久地野安田36番地	TEL(0568)26-6681	FAX(0568)26-6631
阪神サービスセンター	〒560-0894	大阪府豊中市勝部二丁目18-3	TEL(06)6854-7511	FAX(06)6854-7512
徳山営業所 周南サービスセンター	〒745-0861	山口県周南市新地一丁目6-11	TEL(0834)21-5012	FAX(0834)31-0450
四国営業所 新居浜サービスセンター	〒792-0851	愛媛県新居浜市観音原町1013-1	TEL(0897)40-0270	FAX(0897)40-0305
大分営業所 大分サービスセンター	〒870-0108	大分市大字三佐字山ノ神980-1	TEL(097)527-3704	FAX(097)522-2352

●海外関連会社

本山阀门(大連)有限公司　〒116601　中国　遼寧省大連市金州新区港興大街 39-14-7　TEL +86-411-6589-1277　FAX +86-411-6589-1278

●海外販売代理店

中国、韓国、台湾、シンガポール、インドネシア、マレーシア、サウジアラビア

●SALES AND SERVICE NETWORK

Overseas Marketing & Sales Dept. : 11th Floor, Clie Kawasaki, 10-5, Ekimae-honcho, Kawasaki-ku, Kawasaki-city, Kanagawa, 210-0007 Japan
TEL: +81-44-381-8771　FAX : +81-44-381-8773

Domestic Sales Branches : Tokyo, Osaka, Sapporo, Tohoku, Joetsu, Kanto, Shizuoka, Nagoya, Hanshin, Tokuyama, Shikoku, Oita

●OVERSEAS AFFILIATED COMPANY

MOTOYAMA VALVE (DALIAN) CO., LTD
Gangxing Street 39-14-7, Jinzhou New District, Dalian-city, 116601 China　TEL: +86-411-6589-1277　FAX: +86-411-6589-1278

●OVERSEAS NETWORK

China, Korea, Taiwan, Singapore, Indonesia, Malaysia, Saudi Arabia

■本カタログの記載内容は、商品の改良等のため予告なく変更することがありますので予めご了承下さい。
■MOTOYAMA is continuously improving and upgrading its product design, specifications and/or dimensions. Information included herein is subject to change without notice.
■本カタログは正しい情報の提供を目的としたものであり、本製品の市場性または適合性の保証を証明するものではありません。
■This catalog is supplied for information purpose only and should not be considered certified marketability and conformability of this product.

201904 MSP